СИБИРСКИЙ ФЕДЕРАЛЬНЫЙ УНИВЕРСИТЕТ
SIBERIAN FEDERAL UNIVERSITY

1945 2015 ПОБЕДА! 70 ЛЕТ

Краевой фонд науки
Основан в 1992 году

ПРОСПЕКТ СВОБОДНЫЙ-2015

МЕЖДУНАРОДНАЯ КОНФЕРЕНЦИЯ СТУДЕНТОВ,
АСПИРАНТОВ И МОЛОДЫХ УЧЕНЫХ

ЭЛЕКТРОННЫЙ СБОРНИК МАТЕРИАЛОВ МЕЖДУНАРОДНОЙ КОНФЕРЕНЦИИ СТУДЕНТОВ, АСПИРАНТОВ И МОЛОДЫХ УЧЕНЫХ **«ПРОСПЕКТ СВОБОДНЫЙ-2015»**, ПОСВЯЩЕННОЙ 70-ЛЕТИЮ ВЕЛИКОЙ ПОБЕДЫ

КРАСНОЯРСК, СИБИРСКИЙ ФЕДЕРАЛЬНЫЙ УНИВЕРСИТЕТ
15-25 АПРЕЛЯ 2015 Г.

Министерство образования и науки Российской федерации
ФГАОУ ВПО «Сибирский федеральный университет»

Сборник материалов Международной конференции студентов, аспирантов и молодых ученых «Проспект Свободный-2015», посвященной 70-летию Великой Победы

Красноярск, Сибирский федеральный университет, 15-25 апреля 2015 г.

Красноярск, 2015.

«English for scientists»

УДК 330.322

MONTE-CARLO METHOD FOR VALUATION OF INVESTMENT PROJECT'S REAL OPTIONS

A.A. Abrakhmanov
Scientific supervisor: A.V. Grigoriev, Doctor of Economics
Language supervisor: Gavrilina L.E., Candidate of Philological Sciences
Siberian Federal University

Making the decision on investment in the project, the initiator acquires options for opportunity of expansion, abandonment of the project, a delay of the beginning of the project, etc. which could be implemented or not depending on development of the project. Such opportunities are termed as real options of the investment project.

For example, real option to abandon a business is an option put, which represents opportunity to receive liquidating value in case of adverse development of the project. The real option to expand some business is an option call, which represents opportunity to receive additional value (current price of an option) in return of some investments (strike price) in case of favourable development of the project, for example, the increased demand.

Real options are similar to financial options and are estimated usually by the use of Black–Scholes model. The application of the model assumes that standard deviation (risk) of the project is known in advance. In practice, this parameter is replaced with a standard deviation of company implementing the project stock returns. Such replacement is appropriate only in case the company estimates efficiency of the project which is a replica of the company with the same risk level. In other cases industry-average standard deviation is used, although it does not reflect unique opportunities of the project, which are estimated by real options.

The method of an estimation of real options on the basis of Black–Scholes model assumes calculation by the following formula (for a call option):

$$C = S_0 N\left(\frac{\ln\left(\frac{S_0}{X}\right)+\left(r_f+\frac{\sigma_y^2}{2}\right)t}{\sigma_y\sqrt{t}}\right) - Xe^{-r_f t}N\left(\frac{\ln\left(\frac{S_0}{X}\right)+\left(r_f-\frac{\sigma_y^2}{2}\right)t}{\sigma_y\sqrt{t}}\right), \quad (1)$$

where S_0 – current price of the underlying asset;
X – option exercise price;
r_f – risk-free rate;
σ_y – standard deviation of stock returns;
t – time to maturity of an option (years);
N – cumulative function of standard normal distribution.

Thus, determination of the cash flow distribution parameters of the project (a mean and a standard deviation) by means of capital budgeting simulation (by Monte-Carlo method) would be most suitable solution to the issue. The Monte-Carlo method assumes generating considerable quantity of project development scenarios on the basis of the input parameters distributions set in financial model. Capital budgeting simulation in this case allows estimating unknown risks of the

project on the basis of known exogenous factors distributions, such as level of product prices, inflation, interest rates, currency exchange rates, etc.

The standard Black–Scholes model of options estimation is inapplicable to a real options valuation based on the parameters specified by simulation, as the model requires the volatility of the underlying asset returns, but not of the asset itself. This discrepancy of parameters is crucial, but is ignored by the majority of the authors. Some researchers highlight the inapplicability of Black–Scholes formula, but propose no resolution.

A model presented in this paper has been developed to eliminate the discrepancy and make investment project's real options be estimable in practice. Let's suppose that project's initiator can expand or duplicate some business (for example, had the unique right to develop a deposit) if the project is successful. In this case, there is an opportunity to receive extra value in return of additional investments at best-case scenario. The cost of such option can be specified as the difference of partial expectation of the project value and investments multiplied by the probability that the project value will exceed them:

$$\int_X^{+\infty} \frac{S}{\sigma S\sqrt{2\pi}} e^{-\frac{(\ln(S)-\mu)^2}{2\sigma^2}} dS - X\int_X^{+\infty} \frac{1}{\sigma S\sqrt{2\pi}} e^{-\frac{(\ln(S)-\mu)^2}{2\sigma^2}} dS, \qquad (2)$$

where X – strike price (necessary investments into the project);

μ, σ – mean and standard deviation of $\ln(S)$, where S – current value of cash flows from operating activities of the project. Parameters of distribution are determined by results of simulation.

Calculation is based on the assumption that S is lognormally distributed, since the project cost as an asset does not take negative values. The effect of the project cash flows lognormal distribution is described by Brealey and Meyers.

The formula for an option call to expand and duplicate an investment is a solution of expression (2):

$$C = \left(e^{\mu+\frac{\sigma^2}{2}} N\left(\frac{\mu-\ln(X)}{\sigma} + \sigma\right) - XN\left(\frac{\mu-\ln(X)}{\sigma}\right)\right) * k, \qquad (3)$$

where k – coefficient of expansion (0<k<1) or duplication (k>1);

N – cumulative function of standard normal distribution.

Next value $e^{\mu+\frac{\sigma^2}{2}}$ corresponds to an average of project's cash flows and could be replaced with a sample average in our calculation.

The formula for an option put could be deduced by similar above-stated reasoning or by call-put parity:

The cost of an abandonment option put is the following:

$$P = XN\left(\frac{\ln(X)-\mu}{\sigma}\right) - e^{\mu+\frac{\sigma^2}{2}} N\left(\frac{\ln(X)-\mu}{\sigma} - \sigma\right), \qquad (4)$$

where X – strike price (liquidating value of the project);

The offered models of a real options valuation are adapted to the usage of project cash flows distribution determined by simulation. An average value and a standard deviation in

proposed models have no time dimension, so the models eliminate parameters disagreement existing in Black-Scholes model. The quantities S, X and C are expressed in current prices that do not require taking into consideration time value of money. Values of the options calculated by models (3) and (4) are added to NPV of the project. If sum of NPV and real options is positive, the investment in project is economically efficient.

The applicability of the offered model has been demonstrated on the investment project of a rare metals deposit development assessment. The prices of rare metals, cost inflation rates, exchange rate and interest rates have been used as factors of uncertainty.

The Monte-Carlo method has been applied to the project value distribution parameters estimation. The distribution appeared to be lognormal that corresponds to preconditions of offered models. Parameters of the distribution resulted in μ=15,7823, σ=0,5024.

Options to expand deposit mining and to abandon the project during its implementation have been estimated on the basis of distribution parameters. Values of options and distribution of the project return are presented on figure 1.

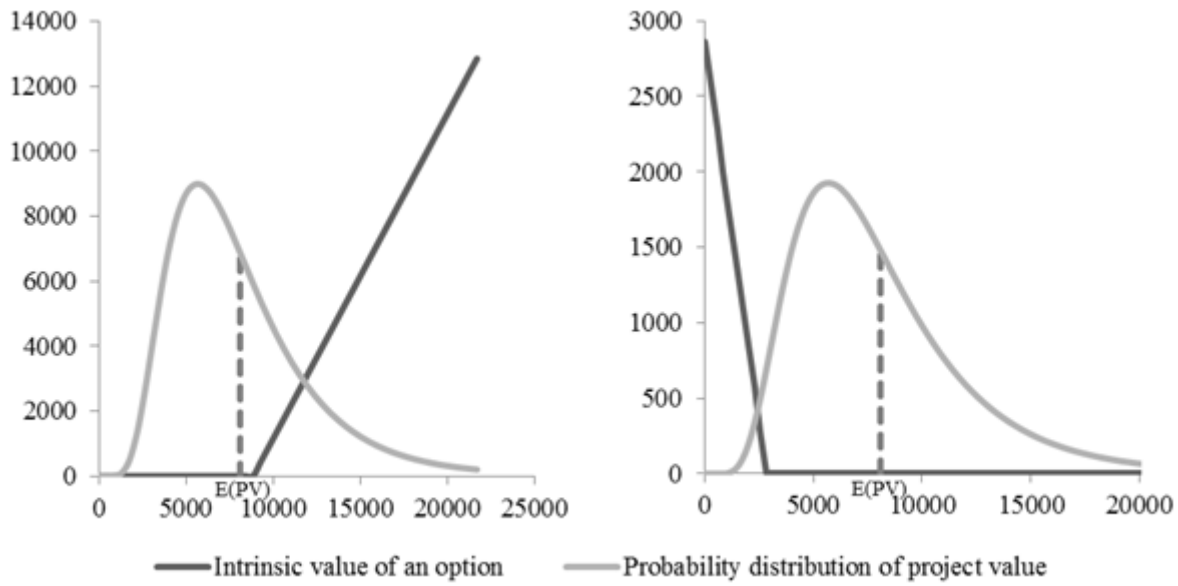

Figure 1. Values of an option to expand (the left figure) and an option to abandon (the right figure)

The following expression demonstrates evaluation of an option to expand. We use present value of investments as strike price $X = 8\,861\,146$ thousands rbl. The expected project value E(PV) is equal to 8 109 151 thousands rbl:

$$C = E(PV)N\left(\frac{\mu-\ln(X)}{\sigma}+\sigma\right) - XN\left(\frac{\mu-\ln(X)}{\sigma}\right) = 8\,109\,151 * N\left(\frac{15{,}7823-\ln(8\,861\,146)}{0{,}5024}+0{,}5024\right) - 8\,861\,146 * N\left(\frac{15{,}7823-\ln(8\,861\,146)}{0{,}5024}\right) = 1\,332\,560\ thousands\ rbl. \quad (5)$$

In abandonment option valuation we use an average liquidating value as strike price $X = 2\,856\,567$ thousands rbl. Value of put option is the following:

$$P = XN\left(\frac{\ln(X)-\mu}{\sigma}\right) - E(PV)N\left(\frac{\ln(X)-\mu}{\sigma} - \sigma\right) = 2\,856\,567 * N\left(\frac{\ln(2\,856\,567)-15{,}7823}{0{,}5024}\right) - 8\,109\,151 * N\left(\frac{\ln(2\,856\,567)-15{,}7823}{0{,}5024} - 0{,}5024\right) = 16\,262\ thousands\ rbl. \quad (6)$$

In conclusion, the research presents a new approach to real options valuation on the basis of capital budgeting simulation. The applicability of the offered method was shown on the example of the deposit development investment project. The proposed models could be used at corporate investing and strategic decisions making.

УДК 711.168=111

GENTRIFICATION: CAUSES, CASES AND WAYS OF DEVELOPMENT

Kseniya .E. Anisimova
Research Adviser Natalia V. Lazuto
Siberian Federal University

To start with “Gentrification is about urban planning, urban renewal that inevitable leads to displacement of the occupying demographic.

Gentrificationis a general term for the arrival of wealthier people in an existing urban district, it refers to shift in an urban community lifestyle and an increasing share of businesses and increasing property value. The term is often used negatively, suggesting the displacement of poor communities by rich outsiders. But the effects of gentrification are complex and contradictory, and its real impact varies.

There are a variety of theories trying to explain gentrification, but most of them fail to explain where and why gentrification does not occur. Gentrification phenomena are mostly seen in large cities, which have an urban tradition at least since industrialization.

Within the last fifty years, gentrification has become a serious concern in numerous cities, particularly in North America.

Many aspects of the gentrification process are desirable. Who wouldn't want to see reduced crime, new investment in buildings and infrastructure, and increased economic activity in their neighborhoods? Unfortunately, the benefits of these changes are often enjoyed disproportionately by the new arrivals, while the established residents find themselves economically and socially marginalized.

Gentrification has been the cause of painful conflict in many American cities, often along racial and economic fault lines. Neighborhood change is often viewed as a miscarriage of social justice, in which wealthy, usually white, newcomers are congratulated for "improving" a neighborhood whose poor, minority residents are displaced by skyrocketing rents and economic change.

Although there is not a clear-cut technical definition of gentrification, it is characterized by several changes.

Demographics: An increase in median income, a decline in the proportion of racial minorities, and a reduction in household size, as low-income families are replaced by young singles and couples.

Real Estate Markets: Large increases in rents and home prices, increases in the number of evictions, conversion of rental units to ownership (condos) and new development of luxury housing.

Land Use: A decline in industrial uses, an increase in office or multimedia uses, the development of live-work "lofts" and high-end housing, retail, and restaurants.

Culture and Character: New ideas about what is desirable and attractive, including standards (either informal or legal) for architecture, landscaping, public behavior, noise, and nuisance.

Consequences of Gentrification

In certain respects, a neighborhood that is gentrified can become a "victim of its own success." The upward spiral of desirability and increasing rents and property values often erodes the very qualities that began attracting new people in the first place. When success comes to a neighborhood, it does not always come to its established residents, and the displacement of that community is gentrification's most troubling effect.

No one is more vulnerable to the effects of gentrification than renters. When prices go up, tenants are pushed out, whether through natural turnover, rent hikes, or evictions. When buildings are sold, buyers often evict the existing tenants to move in themselves, combine several units, or bring in new tenants at a higher rate. When residents own their homes, they are less vulnerable, and may opt to "cash them in" and move elsewhere. Their options may be limited if there is a regional housing shortage, however, and cash does not always compensate for less tangible losses.

The economic effects of gentrification vary widely, but the arrival of new investment, new spending power, and a new tax base usually result in significant increased economic activity. Rehabilitation, housing development, new shops and restaurants, and new, higher-wage jobs are often part of the picture. Previous residents may benefit from some of this development, particularly in the form of service sector and construction jobs, but much of it may be out of reach to all but the well-educated newcomers. Some local economic activity may also be forced out — either by rising rents or shifting sensibilities. Industrial activities that employ local workers may be viewed as a nuisance or environmental hazard by new arrivals. Local shops may lose their leases under pressure from posh boutiques and restaurants.

Physical changes also accompany gentrification. Older buildings are rehabilitated and new construction occurs. Public improvements — to streets, parks, and infrastructure — may accompany government revitalization efforts or occur as new residents organize to demand public services. New arrivals often push hard to improve the district aesthetically, and may codify new standards through design guidelines, historic preservation legislation, and the use of blight and nuisance laws.

The social, economic, and physical impacts of gentrification often result in serious political conflict, exacerbated by differences in race, class, and culture. Earlier residents may feel embattled, ignored, and excluded from their own communities. New arrivals are often mystified by accusations that their efforts to improve local conditions are perceived as hostile or even racist.

Change — in fortunes, in populations, in the physical fabric of communities — is an abiding feature of urban life. But change nearly always involves winners and losers, and low-income people are rarely the winners. The effects of gentrification vary widely with the particular local circumstances. Residents, community development corporations, and city governments across the country are struggling to manage these inevitable changes to create a win-win situation for everyone involved.

Speaking about Russia, we do have the phenomenon of gentrification though it has been given little studied. However in relation to the mass of the process we can speak of only three stages: stagnation, redemption by developers and construction services to meet the growing demands of the middle class. In this sense renovation and gentrification processes Russia are practically indistinguishable from each other.

The examples of gentrification in Russia according to the experts may serve the renewal of Ostozhenka in Moscow which has become an elite area of the capital or a factory Red October which was developed into a cultural area of the Moscow.

The examples of gentrification in Russia according to the experts may serve the renewal of Ostozhenka in Moscow which has become an elite area of the capital or a factory Red October which was developed into a cultural area of the Moscow.

Krasnoyarsk also has examples of gentrification. It may be assigned Vzletka district that some time ago was built standard buildings for workers however now has developed into one of the most prestigious areas of the city.

Bibliography:

1. Whatisgentrification? [электронныйресурс]. Режим доступа: http://www.pbs.org/pov/flagwars/special_gentrification.php
2. Джентрификация в Московской области [электронный ресурс]. Режим доступа: http://phoenix-park.ru/news/dzhentrifikaciya-v-moskovskoj-oblasti/
3. Gentrification [электронныйресурс]. Режим доступа: http://www.urbandictionary.com/define.php?term=Gentrification
4. Gentrification [электронныйресурс]. Режим доступа: http://en.wikipedia.org/wiki/Gentrification

UDK 624.042.12

THE INFLUENCE FACTORS OF FLEXIBILITY AND STRESS CONCENTRATION IN THE TAPS TO THE CALCULATION OF COOLING STRAIN OF RADIAL COMPENSATORS IN HEAT SUPPLY NETWORK

V.I. Belilovets
Scientific supervisor:Doctor of Technical science, Professor Y.L. Lipovka
Language supervisor: T. V. Zhavner
Siberian Federal University

Results of the study of computational models of the radial compensators

Lets consider three computational models of theradial compensators located in the horizontal plane and which are not pinched by the ground. Each computational model variable by the quantity is the radius of curvature tap. There are the characteristics of computational models below. In the calculations of rigid point of support were considered absolutely rigid and the resistance of friction forces of free-end bearings was not taken into account.

Table 1. Characteristics of computational models of radial compensators

Calculatedvalue	Dimension	Value
External pipe diameter / nominal wall thickness of compensator number 1	mm	159/4,5
Cantilever / back width of compensator number 1 (excluding taps size)	m	3/1,5
Allowable slideback voltage of compensator number 1	MPa	146
External pipe diameter / nominal wall thickness of compensator number 2	mm	219/6
Cantilever / back width of compensator number 2 (excluding taps size)	m	4/2
Allowable compensation voltage of compensator number 2	MPa	154
External pipe diameter / nominal wall thickness of compensator number 3	mm	426/7
Cantilever / back width of compensator number 3 (excluding taps size)	m	6/3
Allowable compensation voltage of compensator number 3	MPa	150
Pre-stressingcoefficient	nondimensionalquantity	1
Calculated coolant temperature (the pipe wall)	^{0}C	130
Installationtemperature	^{0}C	-20
The elastic modulus of piping material at a working temperature	MPa	196000

Excessiveinternalpressure	MPa	1,6
Linear thermal expansion of piping material at the estimated temperature of coolant (the pipe wall)	mm/m^{0}C	0,0125
Strength reduction factor of weld joint action at any load other than the bending moment	nondimensionalquantity	1
Reduction factor of weld joint strength at bending moment	nondimensionalquantity	0,9
Rated allowable stress of piping material at the operating temperature	MPa	140

There are graphs of the stress distribution on calculated cross sections of these models of radialcompensators below.

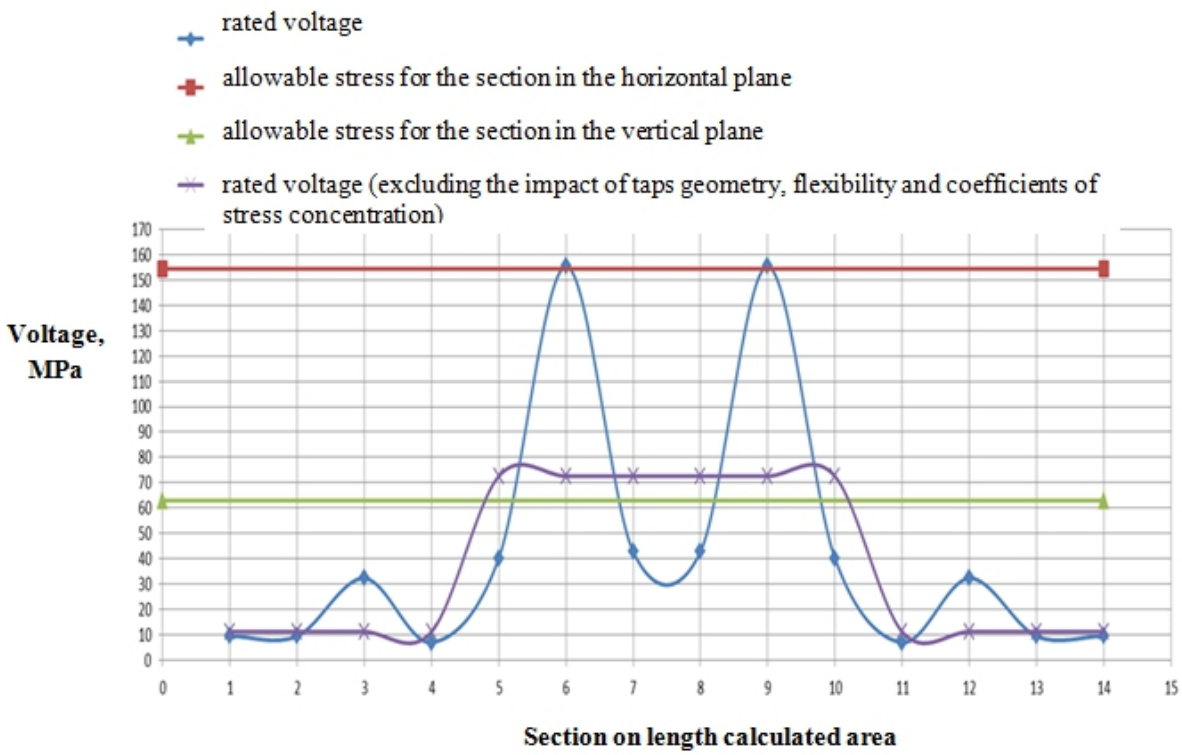

Figure 1. Distribution diagram of tension of the compensator number 1 at radius of the outer diameter of tap pipe to one

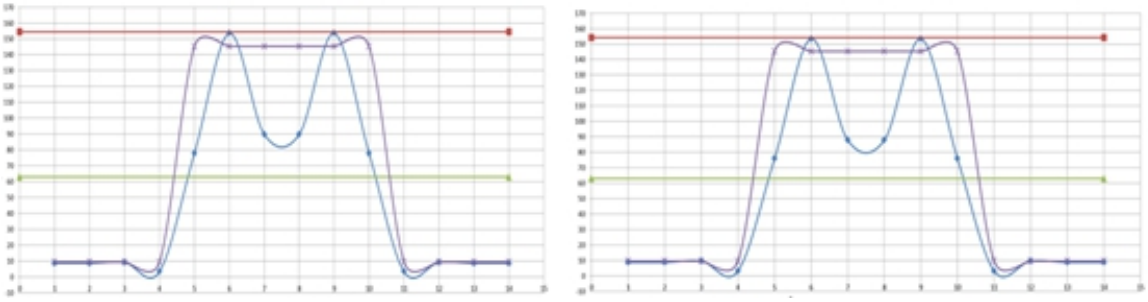

Figure 2–Distribution diagram of tension ofthe compensator number 1 (left) and number 2 (right) at radius of three tap pipe outer diameters

If you pay attention, you can see that the maximum voltage with and without consideration of the coefficients are comparable in the first two computational models within approximately using the tap radius which is equal to three outer diameters of the pipe. For the third calculation model similar graph is as follows

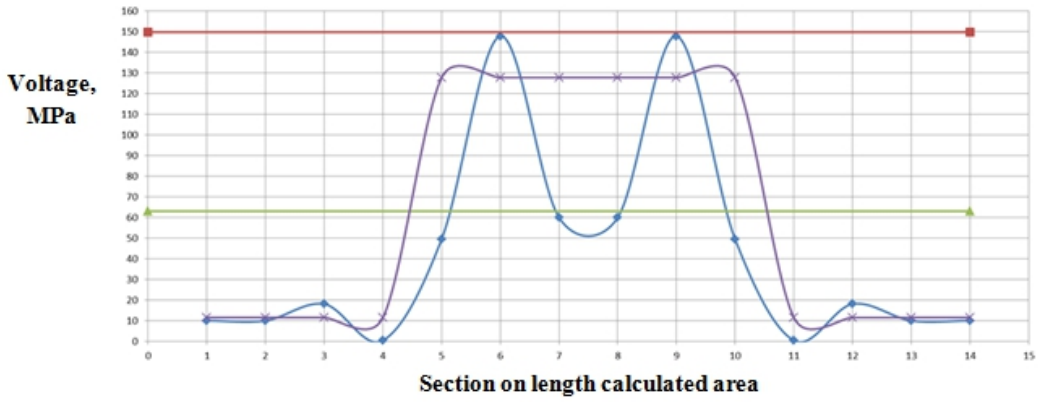

Figure 3. Stress distribution diagramof the compensator number 3 in radius of three tap pipe outer diameters

It is evident that a similar comparison with the first model calculations on the graph above is not observed. Now pay attention to plots of the maximum total departure from the adjacent compensated shoulder radius of curvature taps.

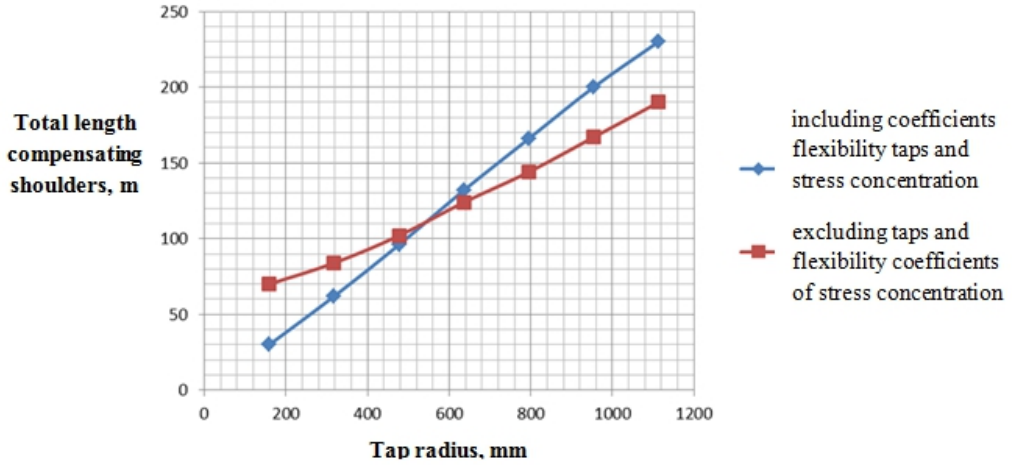

Figure 4. Dependence diagram of the maximum total cantilever of adjacent compensated shoulders by the radius of taps curvature for calculation model of compensator number 1

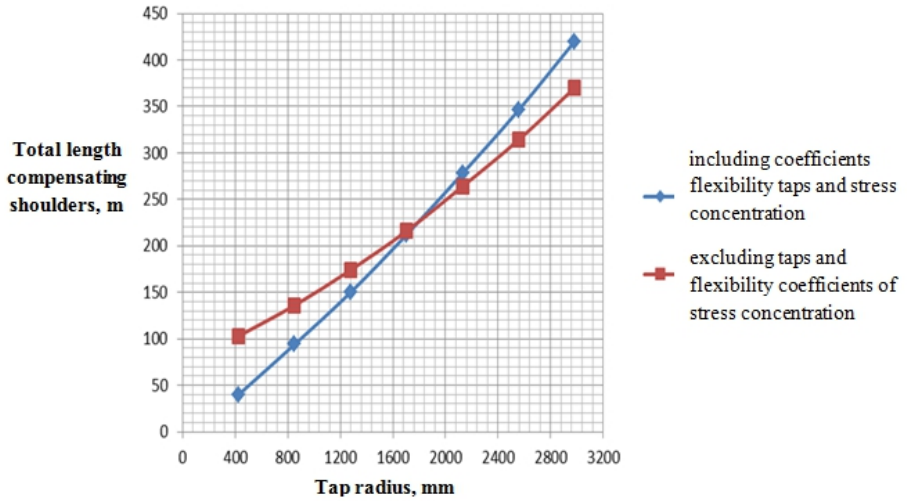

Figure 5. Dependence diagram of the maximum total cantilever of adjacent compensated shoulders at the radius of taps curvature for the calculation model ofcompensator number 3

If the third calculation model to increase the wall thickness from 7 to 12 mm, the point of intersection graphs of maximum total departure of adjacent compensated shoulder radius of curvature taps shifts to the center of coordinates.

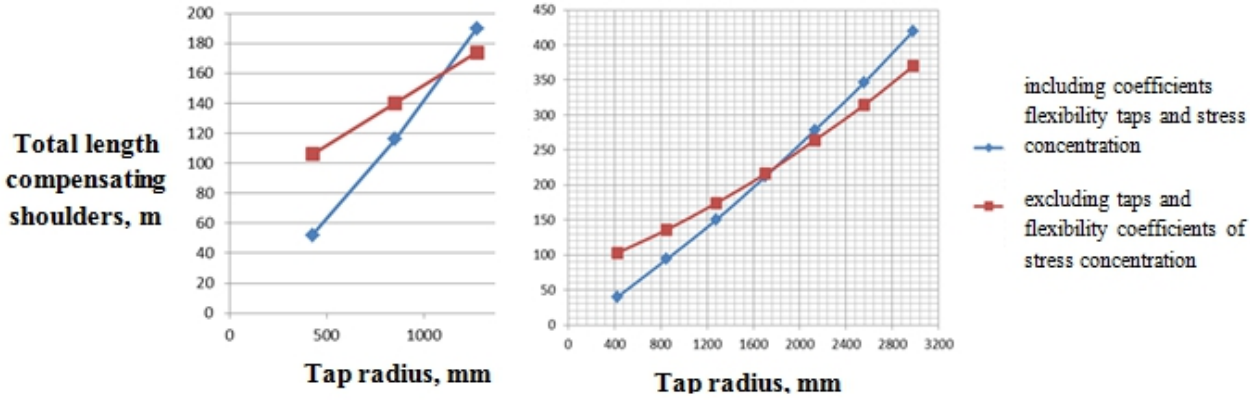

Figure 6. Dependency diagrams of the maximum total departure adjacent compensated shoulders the radius of taps curvature for calculation model compensator number 3 with a thickness of 12 mm (left) and 7 mm (right)

Conclusions

Chart analysis suggests the following conclusions:

1) The most beneficial in terms of safety margins is the use of taps, the radius of curvature which is equal to one outer diameter of the pipe.

2) The increaseof the curve radius of the taps from one to two outer diameters leads to the increases of the maximum cantilever of the compensated shoulders twice.

3) In calculations it is necessary to take into account the coefficients of flexibility taps and stress concentrations because the ignorance of the latter leads to the incorrect results.

4) In case of tap radius reduction and increasing the wall thickness of pipe in calculation model there is the process of equation of the flexibility coefficients of taps and there are stress concentrations to the unity.

References

1. A.A. NikolaevSpravochnik of the designer. M.: Publishing house of literature on construction, 1965

2. A.A. Lyamin, A.A. SkvortsovProyektirovaniye and calculation of designs of thermal networks. M.: Publishinghouseofliteratureonconstruction, 1965

3. A.G. Kamerstein, V. V. Rozhdestvensky, M. N. Ruchimsky Calculation of pipelines on durability. M.: State scientific and technical publishing house of oil and mountain and fuel literature, 1963

4. Norms of calculation on durability of pipelines of thermal networks. RD 10-400-01. M.: StateminninginspectionofRussia, 2001

УДК624.011.1=111

THE RESEARCH OFLATERAL DEFLECTION INFLUENCED ON GLUED WOODEN COLUMNS UNDER THE STATIC AND SHOT-TERM DYNAMIC LOADS.

A.I.Birsnev,R.S.Tutatchikov
Scientific supervisor:S.V.Deordiev, a candidate of technical science
Language supervisor: V.V. Vonog, a candidate of cultural science
Siberian Federal University

Studying the behavior of wood columns under dynamic loads may contribute to their use in structures designed to withstand the loads of shock and explosive character.

The program of experimental studies included tests directed to four prototypes oflateral flexureaffected by the action of static load and six prototypesaffected by the influence of short-term dynamic loading. Identification of prototypes was used for static tests CC-1 –CC-4, for short-term dynamic testsSD-1 –SD-6 respectively.The materialchosen for these prototypesis pine of the second grade in accordance with GOST 2695-83,the glue is resorcinol ФР-12. The cross-section prototypesare: 75x100 mm, the length is 1000 mm.Humidity at the moment of the test corresponds to 12%, the test was conducted under normal conditions.

The purpose of the tests was to determine the characteristics of the stress-strain state of glued wooden columnslateral deflection and description of stability loss.

In terms of this goal the following tasks have been done:

1. According to the prototypes obtained during these tests glued wooden columnslateral deflection under static load the failure load have been defined, the fracture, the diagram of "stress-load have been calculated.
2. According to datatesting six prototypes of glued wooden columns under the influence of short-term dynamic load the obtained as a result of failure load and relative deformation are defined, the process of destruction is describedthe load chart "relative deformation-time"has been defined.
3. Coefficients of dynamismhave been determinedexperimentally.

These testswere conducted in theConstruction Laboratory of the Department «Building construction and control systems» of School of Engineering and Construction of the Siberian Federal University.

As a test the rig steel frame was designed and manufactured. The frame is rigidly fixed to the floor by force. The upper support is pivotally fixed, the lower hinge-mobile in the form of pins, move freely over the entire height of the frame.To prevent crushing of wood with the following dimensions were installed steel columns 108x83x34 mm (Figure 1).

Load on the prototypes was applied by a hydraulic jack DU50P150 based on a mobile support.

The measurement of relative strain oftension metersprototypeswereKF 5P1-20-100B-12 nominal impedance of 99.75 Ohm. Tensiometers "T5" and "T4" were duplicated by metric measuring heads, thedeflections columns were measured byAistov’sdeflectometer. The test of eachprototype was carried out with the application of load step 3 ton to failure.

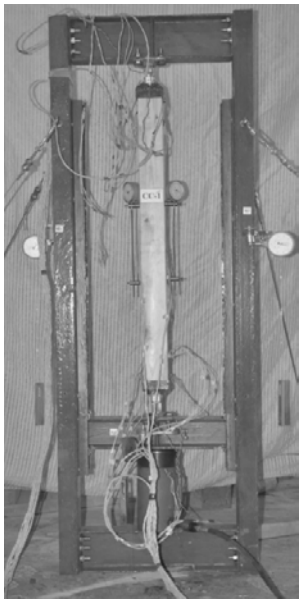

Fig.1.The Stand for static testing columns

The failure load of prototypes columns varied from 24 to 25.2 tons, the failure occurs when the loss of stability of the stretched fibers break in the middle of the column height (Figures 2).

Short-term dynamic tests were carried out on a scrap installation in the laboratory of the "Reinforced concrete and stone structures" of Tomsk State University of Architecture and Building. The diagram ofstatic holding is similar to the prototype tested.The shock was directed to a floating hinge located on a movable girder of test frame.The mass of the falling weight was 450 kg and the drop height varied from 0.25 to 1 m, simulating the effect of destructive and non-destructive load time to analyze the impact of the load on the value of the coefficient of dynamism.

Fig.2. Destruction of prototype CC-1

During the experiment, we measured the strain, acceleration and load.For this purpose tension meters KF 5P1-10-200-A-12 with a base of 20 mm, acceleration sensorsAnalogDivays, working in two planes (X, Y) were mountedon the surface of the columns.

Fig.3. A general view of the test using a pile driver

The tests of prototypes SD-1 were conducted with the drop of the height of 1 m, which allowed determining the breaking load with a minimum duration of the strike.Maximum load corresponded to 56.32 TC; maximum acceleration - 3.87 m/s^2; the duration of the strike was $\tau = 6$ ms; Destructive momentum corresponded to 217.96 mcxs. According to the load values we can draw the conclusion that the column is accelerated.

Destruction of prototypes columns affected by the action of short-term dynamic load was the loss of stability of the gap stretched fibers, similar to the static requirements, but the gap fibers occurs in the upper third of the height of the column (Figure 4.)

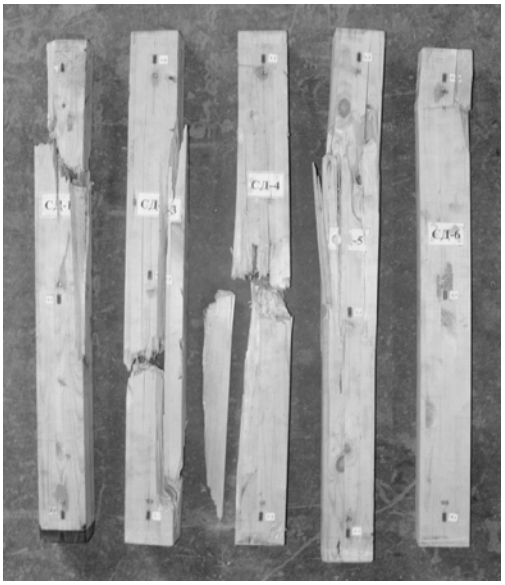

Fig.4. The destruction of the columnsdue to the short-term dynamic load

The results of the tests of glued wooden columns on static and dynamic short-term (impact) load, the dynamic load factor and dynamic movement were calculated. Dynamic load was defined as the ratio of the maximum deflection of the column due to the influence of short-term non-invasive dynamic load to the average deflection of the column under the influence of equal dynamic static load:

$$K_{дп} = \frac{f_{дин}}{f_{ст}},$$

$f_{дин}$–maximum displacement under the action of non-destructive short-term dynamic load;

$f_{ст}$ – theaverage value of displacement of the column under static load equal to the short-term dynamic.

The average value of the coefficient of dynamic displacement was 0.92.

Dynamic load factorwas determined by the formula:

$$K_{дн} = \frac{P_{ст}}{P_{дин}},$$

$P_{ст}$, $P_{дин}$ – the static and short dynamic loads that cause the same deflection.

The average value of the coefficient of dynamic load was 0.97.

The analysis of the behavior of glued wooden columns under static and impact loads led to the following conclusions:

Destruction of columns under static and dynamic load is the loss of stability of the gap stretched fibers, while in short-term dynamic stress fracture zone is located in the upper third of the columns.

Coefficients of dynamic load and displacement under the action of short-term dynamic loadingwere calculated.The coefficient of dynamic movement corresponded to 0.92;dynamic factor loading corresponded to 0.97.The convergence of the dynamic factor was defined as 94.8%. It should be noted that the studied gluedwooden columns are considered to be the systemapplied with a linear restoring force.

Reference:

1. Strength and deformability of concrete structures with short-term dynamic loading: Monograph/ O.G. Kumpyak, D.G. Kopanitsa // Northampton :STT; Tomsk: STT, 2002. – 336 p.

2. Calculation of reinforced concrete structures on the explosive and shock loads / N.N. Belov, D.G. Kopanitsa, O.G. Kumpyak, N.T. Yugov // Northampton: STT ; Tomsk: STT, 2004. – 466 p.

УДК 628.349=111

THE PECULARITIES OF REAGENT DISPOSAL APPLIED IN CHROMIUM-CONTAINING WASTEWATER

Bobrik A. G., a post-graduate
Scientific supervisor: T. I. Khalturina,
a professor, a candidate of chemical science
Language supervisor: V. V. Vonog, an associate professor
Siberian Federal University

The topicality of this research is explained by the fact that in the Russian Federation in the late sixties to early seventies of the last century the most industrial enterprises applied commissioned treatment plants of industrial wastewater, using a reagent water treatment method. Despite the improved methods awareness of water purification, many enterprises still keep on using reagent method, as wastewater treatment is characterized by continuous nature. This makes it difficult the new manufacturing equipment to be installed in old facilities, and construction of a new building for the treatment facilities requires significant additional investment.

According to the results of experimental studies regression equations were obtained, the adequacy of which was verified by the Fisher test [1]:

$$\hat{Y}_1 = 3{,}024 + 2{,}9X_1 + 0{,}867X_2 - 1{,}301X_3 + 0{,}86X_1X_2 - 0{,}0975\tilde{O}_1\tilde{O}_3 + 0{,}5915\tilde{O}_2\tilde{O}_3 + \\ + 0{,}61X_1^2 + 0{,}65X_2^2 + 0{,}34X_3^2$$

$$\hat{Y}_2 = 7{,}01 + 0{,}71X_3 - 1{,}46X_1X_2 - 0{,}58\tilde{O}_2^2 - 0{,}87\tilde{O}_3^2$$

where: X_1- initial concentration of Cr^{6+} ions in the effluent, mg/dm^3; X_2 - pH; X_3 - reducing reagent dose, mg/dm^3; Y_1- residual concentration of ions Cr^{6+}, mg/dm^3; Y_2 - sludge volume%.

According to the obtained regression the following equation was optimized, which yielded the adjustment chart to help you determine the area of the joint optimality (Fig. 1, a, b, c).

It should be noted that the more increasing initial concentration of chromium ions in the treated water, the higher values at doses of reagents and pH in the area of the joint optimality.

Scientists have investigated the use of various current reagents, including waste derived from other industries for intensification of the process. The department of engineering systems of buildings and structures of SEC in this sense is not an exception.

Taking into account the regional context it was necessary to explore the possibility of using waste company Norilsk Mining and Metallurgical Combine granulated metallurgical slag to clean the chromium-containing wastewater [2].

Analysis of granular metallurgical slag allowed to determine its chemical composition: Co - 0.4%; $A1_2O_3$ - 9%; Ni - 1,2%; Fe - 30%; CaO - 8%, MgO - 7%; S - 0,8%; SiO_2 - 43%; Cu - 0,6%. In the slag there is a large amount of Fe and Al, ions of which possess coagulating properties, as a result a solution for cleaning wastewater chromium was obtained [3].

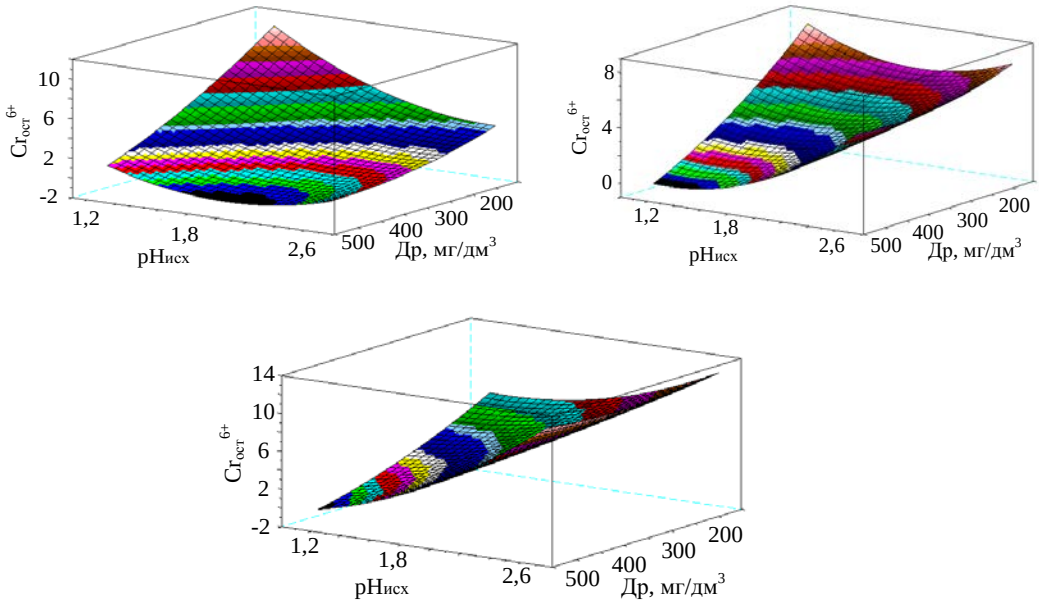

Fig. 1 Adjustment chart: a) when the initial concentration Cr^{6+} = 65mg/dm^3, b) at an initial concentration of Cr^{6+} = 95mg/dm^3, and c) at an initial concentration of Cr^{6+} = 125mg/dm^3

The results of investigations on effluent treatment chromium coagulant obtained showed that a dose of the reagent is 3.5 mg to 1 mg of hexavalent chromium, which is significantly lower than for commercial $FeS0_4 \cdot 7H_2O$. This is due to the fact that the mixed coagulant has more effective coagulating properties causing significant reducing sensitivity which affects coagulation process to the salt composition and expand the zone of coagulation.

To analyze the chemical composition of the sludge thermal gravimetric analysis was applied. The studies were conducted on the instrument NETZSCH STA 449F1.

In conclusion I'd like to underline that the results of studies concerning treatment of sludge in this solution reagent showed that the basic chemical structure represented by magnetism precipitate forms of iron that have a high inner and surface energy, and hence the adsorption and ion exchange capacity, which explains the high efficiency of cleaning as compared to treatment with trademark effluent reactant [4].

In addition it should be noted that the use of coagulation reagent solution obtained from metallurgical slag, allows utilization of metallurgical wastes, thereby reduces the anthropogenic impact on the environment according to the Federal Law "On Production and Consumption Waste".

References

1. Ahnazarova S. L., Kafarov V.V. Optimization experiment in chemistry and chemical tehnology. –. M: Vyssh.shk., – 1978. P. 327.

2. Khalturina T. I., Kurilina T. A., Churbakova O. V. Using natural materials in Krasnoyarsk Territory for wastewater treatment and sludge treatment // Herald MANEB. 2009, Issue 14, № 6, p.169 –174.

3. Khalturina T. I., Churbakova O. V., Bobrik A. G. Chemical treatment of chromium-containing wastewater. Vestnik of Irkutsk State Technical University. 2014. p. 128–133.

4. Ivanova V. P., Kasatov B. P., Krasavina T. N., Rozinova E. L. Thermal analysis of minerals and rocks. "Nedra", – 1974. P. 399.

УДК 81

THECONCEPTOFCOMMUNICATIVECLARITYANDCASESOFCLARITYDISRUPTIONINPOLITICALINTERVIEWSWITHBARACKOBAMA

KseniaA. Bulatova,
Scientific supervisor doctor of Philological Sciences, prof.Victoria I. Tarmaeva
Siberian Federal University

The article explores the concept of communicative clarity and is part of the study of interviews with modern Russian political figures in terms of communicative clarity.

Nowadays clarity of speech has been examined in the works of such prominent scientists as A.Volkov, V.Muchnik, B.Golovin, G.Khazagerov, O.Sirotinina, V.Karasik, G.Dronova, A. Borytko and others. According to most scholars, clarity is one of the key qualities of speech. Clarity of speech presupposes clarity of speech and its availability. Thus, according to A.Volkov, "clarity is manifested in the selection of verbal tools that eliminate the ambiguity of expressions and provide reproducible description" [Volkov, 2001]. He highlights linguistic and extralinguistic conditions of clarity of speech. Linguistic conditionsencompass choice of words, their correct order, consistent combination, effective use of prepositions, introductory words and phrases. As forextralinguistic conditions, theyimplysufficient command of logic in reasoning.

V.Muchnik believes that if "every word in a sentence is understood from the first reading and precisely in the meaning that the author intended it (and not some other), and if this word has immediately been connected in the reader's mind to a word in the sentence and that connection was the intention of the author and his understanding (as opposed to some other) ", then it can be considered clear [Muchnik 1997]. The main types of disruptions of clarity of speech, according to Muchnik, arewrong logical stress, poor understanding of the word forms, erroneous semantic relationship of words and erroneous semantic separation of words.

G.Dronova defines clarity as "uncomplicated speech perception by adapting different communicative qualities of speech to the capabilities and needs of the recipient" [Dronova 2006]. In the study she focuses on clarity of speech in the lecture and identifies the following reasons for lack of clarity: speech errors as well as communicatively inappropriate use of language means and speech structures. G.Dronovadividesdisruptions of clarity into two groups. The first group of disruptions are lexical and semantic ambiguity when the speaker uses the lexical units of limited use. The second group includes grammatical ambiguity when the speaker uses the grammar of pedantic and bookish style.

A. Borytkodefines communicative clarity as "the speech quality of uncomplicated understanding of target specific text, when the author uses all lexical and logical-syntactic means to adapt fully to the needs of the recipient" [Borytko 2013]. The researcher emphasizes that one of the important characteristics of clarity is its focus on the recipient. A.Borytko distinguishes two levels of communicative clarity disruptions: lexical (terminological and lexical-stylistic) and logical-syntactic level. The lexical level of clarity has a range of possible disruptions, e.g a mixture of different styles of vocabulary, mixing paronyms, contamination of phraseology and the destruction of its' structure, inappropriate use of emotional vocabulary and expressions as well as the use of technical terms and jargon. Logic-syntactic level contains such violations of clarity as interrupting, repetitions, syntactic overload of complex sentences, disruptions of lexical compatibility etc.

In this article,we will abide bythe definition ofA.Borytkoandanalysecases of disruption of communicative clarity on the basis ofher classification, namely on logic-syntactic level.

We have chosen to examine the transcripts of political interviews with the US president Barack Obama for the time period of 2014-2015. The analysis of the transcripts has shown that the majority of clarity disruptions happened due to repetitions syntactic overload of complex sentences

Below there are some examples with cases of repetition:*I-I'll send you at least 10 speeches I've made since I've been president* ***talking about the importance*** *of men taking responsibility for their children.* ***Talking about the importance*** *of, uh, young people, uh, delaying gratification.* ***Talking about the importance*** *of, uh, when it comes to child rearing, paying child support, spending time with your kids, reading with them.*In this example the same phrase was used three times. Another example of repetition: *Bill — you know,* ***I — I've taken, I've taken — I've taken*** *a look at it.* Let us look at another example that combines repetition with syntactic overload of complex sentences: ***Because — because*** *what's interesting, when you look at what's going on right now,* ***you're starting to see*** *in a lot of white working class homes,* ***you're starting to see****similar problems — when men can't find good work, when the economy is shutting ladders of opportunity off from people, whether they're black, white, Hispanic, it doesn't matter.* This sentence is hard to understand and one has to read it more than once to perceive it. There is another example of repetition together with lexical insufficiency: *Yeah,* ***but-but-but*** *they're defined by you guys in a certain way. But this — look, this is okay.* ***This-this*** *is —* ***Here — here — here's*** *what I would say.*

There are also some examples of disruptions of lexical compatibility: *Then that* ***puts pressure*** *as well* ***on the home****.* There is a collocation "to put pressure on somebody" but in the example it is difficult to understand what the President meant. The correct version would be "That puts pressure on all people in the household".

Another case of clarity disruption that is seen quite often is interruption. In all of the interviews the president is interrupted at least once. That adds to lack of clarity by the recipient. Let us look at some examples:*PRESIDENT OBAMA - Actually — every study that's been done on school vouchers, Bill, says that it has very limited impact if any —*
*O'REILLY - Try it.*Here the interviewer interrupts the president and any recipient would fail to understand the message that the President wanted to deliver. Another example with multiple interruptions:*PRESIDENT OBAMA - They have, you know —*
O'REILLY - Come on, the Little Sisters of the Poor? Give them what they want.
PRESIDENT OBAMA - Bill, I —
O'REILLY - Right now. Let's-let's just do this.
PRESIDENT OBAMA - Bill, take, here-here's the way this thing works. All they have to do is sign a form saying they don't — they are a religious institution —
O'REILLY - And then they get what they want, right?
The recipient would clearly struggle to grasp the idea in this example.

Thus, our analysis confirms the need forthe studyof communicativeclarity and its disruptions inpoliticalinterviews as well as ways toidentify and correctambiguities.

References

1. Volkov A.A. Course of Russian rhetoric. - M .:Publishing Church of St. Martyr. Tatiana, 2001.-480p.

2. MuchnikV.S.. Basics of style and editing. Rostov on/D .: Phoenix, 1997.-480 p.

3. Dronova G.E. Communicative category "clarity" in the genre of lecture: the dissertation of the candidate of philological sciences: 10.02.01 / G.E. Dronova: Ural state universitynamed after. A.M. Gorky. - Yekaterinburg, 2006.- 165 p.

4. BorytkoA.N.Communicative clarity of sports commentary: abstract fromdis. ... The candidate of philological sciences: 10.02.19 / A.N.Borytko: Volgograd state social-pedagogical university. - Volgograd, 2013.- 26 p.

УДК 81

CONCEPTUAL AND PRAGMATIC FUNCTIONS OF KNOWLEDGE ABOUT TALK SHOW CONTENT AND ITS VERBAL AND NON-VERBAL MEANS OF REPRESENTATION IN TALK SHOW DISCOURSE

Tatiana S. Galich,
Scientific supervisor doctor of Philological SciencesOksana V. Magirovskaya.
Siberian Federal University

The paper is devoted to a contemporary cognitive linguistics research direction of the day, namely: cognitive discourse analysis. It studies the peculiarities of knowledge representation in talk-show discourse considering knowledge about talk-show content as a special type in talk-show discourse organization.

Basing on the conceptual analysis method which integrates seme, contextual and pragmatic analysis of language units the author classifies knowledge about talk show content into knowledge about subsequent and knowledge about previouscontent, describes conceptual and pragmatic functions of these types of knowledge in talk-show discourse organization as well as outlines verbal and non-verbal means of theirs representation.

Key words: *discourse, talk-show discourse, knowledge representation, conceptual and pragmatic potential, verbal and non-verbal means of knowledge representation.*

Introduction

There are various approaches to discourse investigation as well as many theories of discourse analysis produced in recent years. However, cognitive discourse investigation is considered to be one of productive and at the same time one of intricate directions in contemporary linguistics by the reason of dealing with a complex object named discourse.

According to cognitive approach discourse is viewed through the triad “communicative situation-knowledge-intention” because it combines different cognitive and pragmatic features of discourse production and interpretation.Mentality, cognitive abilities (memory, attention, knowledge representation, language ability), processes of conceptualization and categorization are referred to cognitive features of discourse production and interpretation. Pragmatic features in turn include participant’s intentions, believes and wishes. Different types of knowledge (cognitive level of discourse) are underlined in different types of discourse. Their representation depends upon person’s intention (pragmatic level of discourse) to present what they know about subject matter or to hide something about it.

Hence, discourse could be represented as an interplay of cognitive and pragmatic factors. Language plays the key role in the process of discourse organization because it is exactly what contributes to organize discourse, participant’s interaction in definite type of discourse and helps to represent participant’s knowledge in a logical and comprehensible way.

We hypothesize that different types of knowledge constitute the conceptual basis of discourse organization. Participants activate and represent their knowledge according to their intentions by different verbal and non-verbal means. Knowledge representing in talk-show discourse, thus has conceptual and pragmatic potential.

According to Kibrik’s knowledge types typology (Kibrik 1991) we classified knowledge represented in talk-show discourse into introductive knowledge, complementary knowledge and knowledge about talk-show content and built the system of verbal and non-verbal means of their representation and activation.

In this paper we present a piece of research on knowledge about talk-show content, describe the means of their representation and functions that serve to their representation.

Knowledge about talk show discourse content is similar to “navigators” or “guiding lines” which interviewer allocates throughout interaction in talk-show discourse. In general, such type of knowledge serves function of building common discourse context and has its purpose to remind or to inform participants of talk-show about important information relating to them or to their discursive interaction. Such knowledge reports interviewee and audience about subsequent or previous talk-show content. Knowledge about discourse content is divided into two types, with each type devoted to a different knowledge order representation in talk-show discourse. There are three sections in the paper. First section is devoted to the description and analysis of knowledge about subsequent content. The second one presents the characteristics and analysis of knowledge about previous content. In the third section we conclude about the functions of knowledge about talk show content and outline some possible directions for further investigation.

Knowledge about subsequent talk-show content

Knowledge about subsequent talk show content includes interviewer’s indications to participants’ names or their subsequent behavior in talk-show, also it includes the nomination of results in their public life, for example titles of their books and films. The key feature of such type of knowledge is that its representation let viewer or audience know what will happen in talk-show soon. Such type of knowledge could be represented in talk-show discourse by verbal and non-verbal means. Non-verbal knowledge representation includes visual means like showing to viewers a fragment of video taken from future context of participants’ interaction.

The following verbal means and constructions were referred to verbal means of knowledge representation:

1. Linguistic means with temporal semantics
2. Linguistic means with supplementary semantics and semantics expressing knowledge volume

During talk show interaction an interviewer draws viewers’ attention by wide range of conventional for talk-show directives *(stay there, don’t go away, stay with us, don’t click away etc.).* Take, for the example, the usage of the directive *stay with us:*

Coming up: what others in the country community will say about sexuality? ***Stay with us*** *(Steve Grand. Feb.26’14).*

The usage of linguistic means with temporal semanticscontributes to the organization of knowledge about talk show content. The represented knowledge reports about what participants are going to do or tell in the further part of talk show. Linguistic means with temporal semantics are aimed at forming logic and sequence providing coherence in talk show discourse. We have included the following linguistic means into a group of linguistic means with temporal semantics:

1. Adverb *next* with the meaning “future action”

Next *the “Workaholics” will answer your questions. Stay with us and I talk to you (The Workaholics cast. Feb. 23’14).*

We will discuss some of his favorite roles ***next****. Don’t go away (James Brolin. Nov. 29’13)*

2. Word-combination *in a few minutes*:

In a few minutes *Day Storm Power, the YouTube sensation, will try to make me a little more hip hop. Stay there (Kevin Nealon&DeStorm Power. Aug. 02’12).*

Andy Garcia is one of my favorite people. We will answer some social medium questions ***in a few minutes****. Don’t go away (Andy Garcia. Mar. 18’14).*

3. Verb *to back* in the grammatical form of future time:

From Andy Garcia's roots to where he was "The Godfather". You gonna like this when ***we'll back*** *(Andy Garcia. Mar. 18'14).*

We ***will be back*** *with Will Forte. He is one of the stars of "The Watch". He plays sergeant. The movie opens on the 27th (Will Forte. Jul. 26'12).*

4. Grammatical construction *coming up* in its two variations denotes future action ("Coming up <information> will+ verb" and "Coming up <conversation> + next").

Construction "Coming up <information> will+ verb" focusing viewers' attention on the topic of future conversation explicitly:

Coming up*: We* ***willopen up*** *about cross-dressing and moustaches: that's what we* ***will*** *find out next (Will Forte. Jul. 26'12).*

Coming up: *Meghan* ***will tell us*** *what she really thinks about this year candidates.Staywithus (MeghanMcCain. Jul. 12'12).*

Whereas construction *"Coming up <conversation> + next"*marks representation of video fragments showing future dialogues between interviewer and interviewee. Thus, the topic of conversation is expressed in talk show implicitly and viewers have to interpret it themselves:

Coming up:

Oliver Stone: So Nick Romney is technically Mexican American. He has yet to come out parochial ethnic classes <…>

That's ***next*** *on "Larry King now"(Oliver Stone. Jul. 25'12).*

In the group of linguistic means with supplementary semantics and semantics expressing knowledge volume we included adverb *more* in the morphological form of comparative, preposition *plus* and collective pronoun *all* together forming the construction *plus+ all ahead.*

Adverb *more* in the morphological form of comparative stresses the extension of knowledge volume in talk show content:

*From "Any way" to "King of the blue birds".****More*** *with Andy Garcia (Andy Garcia. Mar. 18'14).*

<…> we will talk ***more*** *about his relationships with our old friend Shon Pan. Stay with us (Emile Hirsch.Dec.10'13).*

The interviewer uses the construction *plus+ all ahead*to introduce supplementary information. In the construction the collective pronoun *all* expresses knowledge volume:

Plus *he lets me under the secret of drawing Stewie: it's* ***all ahead*** *on "Larry King now" (Seth MacFarlane. Jul. 17'12).*

Knowledge about previous talk-show content

An interviewer uses this type of knowledge to remind viewer the information about interviewee. The representation of knowledge about previous talk show content corresponds to three models with different substantial components including interviewee name/ profession/ the nomination of the result of interviewee's activity/ nomination of previous topic in previous conversation. These substantial components can be varied by the interviewer according to his intention to present interviewee and to accentuate defined substantial component in knowledge representation. The central component in any model of knowledge representation is the verbal construction *to be back with the meaning "return":*

We are ***back with****Andy Garcia. "Rob the Mob" opens twenty first (Andy Garcia. Mar. 18'14).*(Model: Interviewee's name/ the nomination of the result of interviewee's activity/ time of product are coming out).

We are ***back with****Will Forte (Will Forte. Jul. 26'12).*(Model: Interviewee's name/ name of group)

We are ***back with****Chris Jericho, whose goal is to be everything at all times (Chris Jericho. Nov. 14' 13).* (Model:Model: Interviewee's name/ name of group/ interviewer positive evaluation).

Noteworthy that representing the knowledge about previous talk show content interviewer provides it with his positive evaluation, for instance the evaluation can be expressed by such adjectives with positive connotation as *very talented, fantastic* or positive commentary like *whose goal is to be everything at all times* or *I love these name:*

We are ***back with****the fantastic Judge Judy (Judge Judy. Dec. 05'13).*

We are ***back with*** *the cast of "Workaholics": Blake Anderson, Adam DeVine, Anders Holm, I love these names (The Workaholics cast. Feb. 23'14).*

Conclusions

In this paper, we try to present a piece of the research on conceptual and discourse organization centering on the analysis of knowledge about talk show content. Taken together the results of the analysis suggest that the representation of knowledge about talk show content is aimed at reconstructing of the content of participants' interaction. We suppose that such type knowledge and the system of reveled verbal and non-verbal means directed at viewers with the purpose to reconstruct the talk-show content focus and attract their attention to talk-show as well as raise their interest to talk show. With the help of verbal and non-verbal means an interviewee according to his intention operates with participants' attention switching it to previous or future aspect in talk-show discourse content. To bring the paper to an end we would like to outline some directions for further investigation. One of the productive further directions seems to be the investigation of knowledge organization and representation in different types of talk-show discourse which leads to complete and integrate classification of knowledge types and means of their representation.

References

Kibrik,A.Aboutsometypesof knowledge which are rerepresentedinthemodelofnatural dialog. 1991. № 1. P. 61 – 69.

УДК 539.2

ASSYMETRIC BEHAVIOUR OF AMPLIFIED STIMULATED EMISSION IN PRL-L3 DYE SOLUTION:QUANTUM-CHEMICAL APPROACH

Nina Yu. Ignatova, Andrey A. Zimin, Viktoriya V. Savchenko
Advisor: Sergey P. Polyutov, PhD
Siberian Federal University, Laboratory for Nonlinear Optics and Spectroscopy

Recently three-, four-and even five- photon-pumped amplified spontaneous emission (ASE) in solutions was experimentally observed [1]. As a pumped mechanism, it is based on the multi-photon absorption which is nonlinear process. This soon became one of the most interesting subjects in nonlinear optics and quantum electronics. Much of this interest is due to the fact that many important applications of the effect can be found in the emerging areas of biophotonics and optical communications. The effect is also associated with rich interpretations and issues of fundamental physics.

In 2005 experiment was carried out on group of dye solutions (PRL-Lx) as a gain medium [3]. These recent experimental studies of stilbazolium dye solution showed an unusually strong dependence of the ASE spectral profile on pump intensity in the case of three- photon-pumped excitations in PRL-L3 dye in dimethylsulfoxide (DMSO) solution. It was found that at high pump levels there is a remarkable wavelength shift (20-30 nm) between the forward and backward stimulated emission pulses. Authors of papers [4, 5] try to explain this threshold dependence of ASE spectral profile in dynamical theory. In this model effect is related to the relaxation of exited states, which lead to different ASE channels. Explanations of this effect currently available are incomplete and this field is still available for theoretical study. Here we discuss the quantum-chemical approach to the explanation of the asymmetric behavior of ASE profile in multiphoton active dye solution PRL-L3.

PRL-Lx (x=1-10) dyes were first synthesized and reported in [1]. Structurally these dyes are derivatives of the stilbazolium salts which is π-conjugated system consisting of donor and acceptor parts connected by a double bond (Fig.1). We should take into account possibility of double bond rotation. Stilbazolium dyes (PRL-Lx) have basically the same molecular backbone but differ either in their electron donors or their electron acceptors. Multiphoton-pumped lasing with tunable wavelength can be achieved for these dyes in solutions.

Another feature of this system is the polar solvent.Polar solvents often lead to dissociation of salts like PRL-Lx group compounds. PRL-L3 dissolved in DMSO is most likely dissociated as it is simply a derivative of the quaternary ammonium salts class, whose members are well soluble in DMSO. In our work, we estimated the contribution of solvent, taken directly as individual molecules. We were able to conclude that it has no impact on the electronic transition. We study only cationic form in this paper.

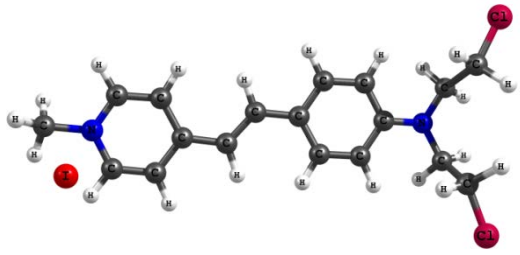

Figure 1. Studied system PRL-L3 in DMSO solution

Authors of papers [3,5] claim to observe excitations in active PRL-L3 dye involving up to four photons at once by comparing the wavelength of the incident beam with the coherent emission wavelength. We worked out a few hypotheses to explain this effect: 1- vibronic relaxation, 2 - S2 − S1 and S1 − S0 transition concurrence, 3 -

intramolecular charge transfer (ICT) possibly assisted by solvent and 4 - twisted ICT. Strictly speaking the double bond rotation can occur only in the excited state. Our claims could be justified by careful calculations of the ground state and several singlet excited states (S1, S2, ...), which to our knowledge haven't yet been performed for the PRL-L3 dye.

Ground-state S0 has been studied using computations at the DFT level, while excited S1 state was treated at the TD-DFT level. In all DFT and TD-DFT calculations we have used the CAM-B3LYP hybrid range-separated exchange-correlation functional and the same integration grid size. Geometry optimization for S0 and S1 states was done in two steps: 1 - initial hessian estimation using small STO-6G basis with s,p diffuse augmentation and 2 - further geometry optimization using aug-cc-pVDZ basis set. Vertical transition energies and dipole moments for S0 → Sn series were initially calculated using TD-DFT/aug-cc-pVDZ with M11 range-separated meta-GGA exchange-correlation functional. All these computations have been performed using the GAMESS package.

We studied the process of photoisomerisation of PRL-L3 starting from the equilibrium geometry search of trans-isomer. Calculated energies and transition dipole moments of vertical transitions from the ground state S0 to the excited states S1–S10 at the TD-DFT for trans-PRL-L3 shown at the fig.2. It can be seen, that "S0 → S1" dominates the others with magnitude of dipole moment is 11.83D that 10 times bigger than others. We consider that higher exited states have no impact from the standpoint of interpreting on ASE profile. The experimental linear absorption spectra of the 0.2 μM PRL-L3/DMSO solution has one intense peak at 425 nm [5] corresponding to 2.743 eV transition. Magnitude of "S0 → S1" energy gap from our calculation corresponds well with peak position in the linear absorption spectra and the 3PP energy.

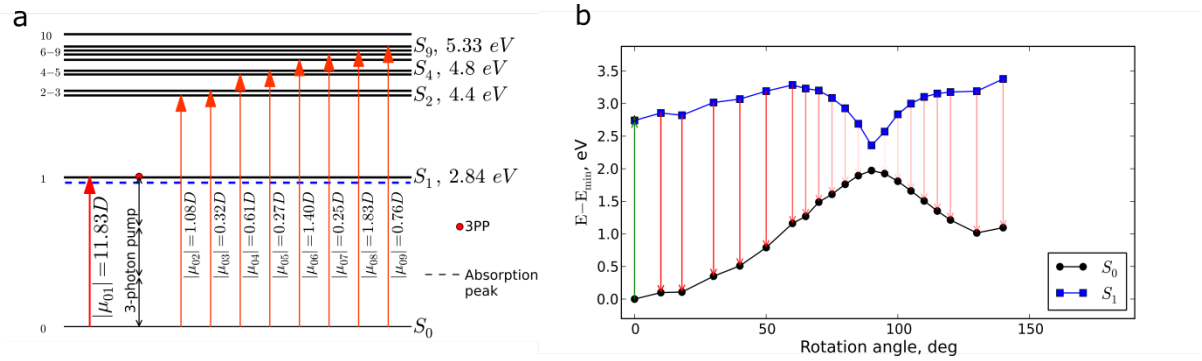

Figure 2.a) Energy level scheme and transition dipole moments for the PRL-L3 cation;
b) Potential energy scan of s0, s1 states across isomerization reaction pathway of PRL-L3

Then we have done potential energy scan of S0, S1 states across the double bond rotation coordinate of isomerization pathway of PRL-L3. Potential energy curves for S0, S1 states are asymmetric across the reaction coordinate (figure 2b). This result makes it possible to explain ASE. We assume that two formed isomers give ASE with different frequencies.

Another important issue is the activation energy barrier of the isomerization process. Activation barrier in S1 excited state is about 0.5 eV and is much bigger then the thermal energy and photo-induced isomerization may occur here. We suppose isomerization may occur during the duration of pulse due to Rabi oscillations of coherence and population.

The results of our research are possibly interesting both for the purpose of explaining ASE and by themselves, because detailed quantum chemical calculations PRL-L3 have not yet been performed.

1. G. S. He et. al., Opt. Lett. 20, 2393 (1995).
2. Guang S. He et. al., J. Opt. Soc. Am. B Vol. 22, No. 10, 2219 (2005).
3. QingdongZheng et.al. Nature Photonics 7, 234–239 (2013).
4. Victor Kimberget. al., Physical Review A 74, 033814 (2006).
5. Guang S. He et. al., Physical Review A 73, 033815 (2006).

УДК 339.138

CHANGES IN CONSUMER'S BEHAVIOR DUE TO DEVELOPMENT OF SOCIETY AND ECONOMICS

Karpychev A.P., 2nd course, School of Economics, Management and Environmental Studies SFU
Scientific adviser- Draganchuk L.S., PHD
Siberian Federal University

Marketing knowledge is well-spread, due to need of suppliers of all sorts to produce and sell goods that are demanded by individuals and whole society. You can determine their needs by analyzing their cultural perception. You cannot analyze the market without the analysis of surrounding environment

As P. Kotler says "People grow up in specific atmosphere, which form their views, cultural values and norms of behavior. They do not realize it, but they perceive world view, which affect their relation to themselves and to others. Within the specific society, people stick to different views and values. They tend to be stable in their views… [1].

According to P. Kotler, main factors, that affect consumers behavior are: cultures and subcultures, social classes, reference groups, family, social roles and statuses. According to theory of "idle class" made by T. Veblen, place that individual have in society, his reputation and image can crucially affect his choices, as a consumer. Apart from T. Veblen's theory, other theories were created. Karl Marx formed theory of commodity fetishism, German sociologist G. Simmel created fashion theory. W. Sombart formulated concept of luxury. Other German Sociologist M.Weber formulated concept of status groups and protestant ethic. [2].

At the same time, I. Lipsits points on trends of transformation of basic elements of modern society, which are created by changing culture in different counties. These trends appear in Russia. In particular, one of the most popular trends in Russia is gender differentiation. Not so long ago, "unisex" clothes were very popular. Now, it is common to demonstrate your gender identity. Many consumption patterns prove their stability. Others-change significantly. [3].

World economic crisis made trend of economical consumption, which started to form before crisis begin, more popular. Consumption pattern, which can be called "anti-luxury", is demonstrated even by wealthy people. This trend is supported with fall in loyalty for brands and increase in popularity of minimalism.

In the last decade, world faced a problem of population aging. In all countries, share of elderly population is rising. This problem is even more actual for developed countries of Europe, where share of elderly population is 20% and it is said that by 2050 it would rise up to 40%. So, in the near future, share of elderly people will significantly change. Trend to "save health, not to restore it" affect food market, tourism, fitness market etc. [4].

So, the main goal of marketing in modern conditions is to identify new trends of development of consumer markets and goods, which can respond this trends.

List of sources of material

1. P. Kotler. Principles of Marketing
2. Bistrova O.A. Social and cultural aspects of marketing.
3. Lipsits I.V. Cultural transformations and changes in models of consumer patterns. Economic questions №8, August 2012, p.64-79
4. Astashova U.V. Conceptual bases of age-related marketingые основы возрастного маркетинга. Вестник Удмуртского университета, выпуск 3, 2014 г.

УДК 624.15=111

CHEMICAL SWELLING OF SOILS IN GLASS TEST CYLINDERS.

M. M. Khodjaeva, M. Y. Semenov, V. A. Timofeeva,
scientific supervisor: O. M. Presnov, a Candidate of Technical science
language supervisor: V. V. Vonog, a Candicate of Cultural Science
Siberian Federal University

In the environment there is a certain class of subsurface rocks which deformation can be caused not only by action of external loading, but also by change of their physical state under the influence of moistening. Such soilsare usually called structural-unstable soils. Clay swelling soils can be referred to them.

Swelling is the process, developing in clay soil at their moistening. This phenomenon leads to various deformations of the constructions bases and decreasing ground strength. Therefore much attention is paid to studying this process in practice of engineering geology.

By experience of construction the zoned local areas on the globe (where the swelling soil lies) have been revealed. The clay swelling soil is widespread in the territory of Russia, but mainly in European part, namely in the territory of the Moscow region, the Volga region, including Volgograd and Volgograd Region, and also in the south of Western Siberia, in Omsk and Novosibirsk Areas.There is clay soil which doesn't swell, as a result of water interaction but its volume is increased due to effect of various acids. As a consequence of active and rapid industrial progress, chemical refineries and the enterprises of nonferrous metallurgy connected with extracting, application and acids storage and alkalis have been developed worldwide. During technological accidents there is a leak alkalis and acid solutions. Affecting conventional soil but not swelling one causes increasing soil volume. As a consequence, there has been a need for research of this phenomenon. The technique of conducting experiments directed to identify reactions various solutions of acids to soil of the broken structure in glass cylinders was applied. Therefore during interaction on the usual not swelling soil there is it volume increase. As a result, there has been a need for research of this phenomenon. The technique of conducted experiments identifying reactions of various solutions of acids influenced deformation structure soil in glass cylinders was applied.

Samples of clay soil have been selected in Oktyabrsky and Zheleznodorozhny districts in Krasnoyarsk. For these experiments clay soil with plastic index 2-16 and sandy silt have been chosen. Samples were dried up and disaggregated in a porcelain mortar to a free-flowing condition. This procedure was carried out for possibility of a infilling and consolidation of soil into glass cylinders with a measured volume of 50 ml, 20 and 18 cm high, with an internal diameter of 2,2 cm; and glass cylinders with a measured volume of 100 ml, 21.5 cm high, with an internal diameter of 3 cm respectively. Soil was filled up layer-by-layer in cylinders and rammed before obtaining the set density. Cylinders were filled up to the height of 7,5 cm or 5.5 cm that corresponds to 30 ml of soil. After that the mass of the cylinder with soil was measured.

Moistening by acids was made according to safety rules, in rubber gloves, when using a laboratory extract. Acids were filled up in from top of the cylinder inside of 10 ml. The experiment lasted in total 96 hours. In the process was supported by means of photo and video shooting. After conducting these experiences it was revealed that in the first hour of interaction of acids with soil there is a considerable change of soil volume. In this regard, video shooting of experiences was made in the first hour after the beginning of moistening. Photoshooting and

visual observation over the experiment course were made. As a consequence the results of research were systematized.

The process of chemical swelling of clay soil under the influence of solutions of acids of different concentration can be divided into two periods apparently. During the first period swelling happens due to absorption of moisture during a time of soil and occurrence in its skeleton of the negative stretching pressure. In this process the beginning of occurrence of swelling and the moment of approach of its stabilization coincides with the beginning and the termination of infiltration moisture absorption. Volume deformation of soil is a consequence of mechanical separation of clay particles. The second period starts with chemical interaction between clay fractions of soil acid as well as it proceeds until concentration of interaction products don't reach a certain size.

Conducting a test in permeameter and compression devices there is no opportunity to see process of chemical reaction in a ring. Therefore, conducting experiences in glass cylinders with possibility of research of the process of interaction with acids of various concentration with soil would be valuable. In technological accidents happened in the industry where a large number of acids are used, moistening of the bearing soil in construction happens from a ground surface to the basis. Therefore it is worth paying attention to research process of moistening of soil samples described above.

As a result, the following dependences of swelling are revealed: plastic index, a type of acid and time.

Due to this experience swelling is more significant in terms of the soil containing larger particles than in terms of clay fine-grained soil. Sandy silt affected by acetic and sulfuric acid increased in volume in comparison with their impact on loam. It can be explained by the reaction of ions of these acids, forces capillary and a surface tension. However, characteristics of chemical swelling of hydrochloric acid were an average identical to other two acids. This regularity can be connected with the small disjoining pressure of an ion of Cl^{-} and primary influences of forces of a surface tension forces and capillary forces.

From these experiences it is obvious that the highest characteristics of swelling happened due to influence of sulfuric acid. Additionally the stale volume is increased due to acetic acid. As a result hydrochloric acid causes smaller swelling, than other acids, but contributes to sudden swelling the first 30 minutes of interaction with loam. In the subsequent swelling recession is observed.

Obtained results of done work connected with high soil raise were observed during the first 30 minutes of reaction. In day there is the maximum swelling followed by stabilization ofsoil volume begins. It should be noted the feature of hydrochloric acid. During an interaction of sandy loam with hydrochloric acid in the first hour we observe soil swelling, as well as with other acids, and in the subsequent, reduction of volume of the bulked-up. In a case of testing a loam happened within 24 hours, followed by lowering soil level.

In conclusion we would like to underline that experiment was conducted with a small amount of tests, research of chemical swelling demands further studying. The great interest is represented by other types of acids (different concentration) and soil with various plastic index and also carrying out experiments with the use of samples of undisturbed structure in permeameter and compression devices in case of which moistening will happen from the lower part of a sample.

The part of the conducted experiments showed a larger increase in volume of sandy silt in comparison with fine-grained clay soil. In this regard, further research interaction of acids with sand of various fineness would be valuable.

References

1. Sorochan E. A. Building a construction on the swelling soils - M Stroyizdat. 1989 - 308 p.

2. Maltsev A. V. Chemical heaving in the basis of constructions. - Autoabstract // State building of Russia, Moscow, 1993 - 27 p.

УДК 657.312.33:69:502

THE ECOLOGICAL-ECONOMIC MODEL FOR CALCULATING CONSTRUCTION COSTS

V. E. Korotchenko, a post-graduate
scientific supervisor: V. V. Vonog, a candidate of cultural science
Siberian Federal University

Every product or process goes through various phases or stages in its life. Each stage is composed of a number of activities. For industrial products, these stages can be broadly defined as material acquisition, manufacturing, use and maintenance, and end-of-life. In terms of construction these stages can be defined more precise:material manufacture, construction, use and maintenance, and end of life.

Today the rational use and improving the efficiency of the companies' property, as well as residential real estate, in accordance with their life cycle is one of the priorities of the owners or holders of such property. The use of real estate in terms of risk and uncertainty requires an evidence-based approach applied for management decisions, and the use of appropriate methods and tools.

At the same time, architects are increasingly interested in characterizing and reducing the environmental impacts of the buildings they design. The following tool like energy modeling assists in predicting and, through good design, reducing the operational energy in buildings.

In ecological-economic model the total cost of the buildings includes the cost of each stage of the life cycle of a building.To indentify the construction, which performs the necessary requirements for energy efficiency and sustainability in the ecological and economic model introducing the concept of an efficient building– it is the energy efficient building, designed and built taking into account the preliminary calculation of the total cost. The main task of ecological-economic model is to estimate the total cost of the project solutions of the future performance of buildings, which will provide low cost of ownership for the entire period of the life cycle of the object.

The working hypothesis for the ecological and economic model is that the initial costs of application energy efficient and environmentally technologies on design and construction stages as a result of significantly reducing operating costs during the operational phase of the building,which on average is 75% of the total cost, which leads to a reduction in the total cost of the building.

Life Cycle Assessment is a tool that allows architects and other building professionals to understand the energy use and other environmental impacts associated with all life cycle phases of the building: materials manufacturing, construction, use and maintenance, and end of life.

Life cycle assessment (LCA) – a method of assessing the environmental impact associated with a particular product / service. It is governedunderISO 14000,theseries of internationalstandards addressing environmentalmanagement. AccordingtoInternational StandardISO 14040,LCAis a"compilation andevaluationoftheinputs,outputs andthepotential environmentalimpactsofaproduct systemthroughout itslifecycle.

In the current state of LCA, the limitations must be recognized; however, it also needs to be recognized that with increasing use, research, and tools development these limitations will be resolved.

The first limitation is the deficit of the financial stimulus for LCA use.Currently the greatest incentive for the use of LCA in the design process is the ability of an architect to show to

the client that the use of LCA will improve and demonstrate the “green-ness” of the project and help significantly in increasing long-term paybacks by better decision making.

A second limitation is the deficiencies in the databases completeness requiring any architect or a LCA practitioner to use multiple data sources and increasing uses of assumptions. This limitation is being reduced as the databases enlarge their information bases and as more and more easily used tools become available.

The last major limitation is the lack of benchmarks established by government authorities. This limitation also will be overcome as LCA becomes more commonly used and the benchmark data become more readily available.

However, a similar approach has been successfully used for a long time abroad and supported by advanced analysis techniques that allow optimize the design on pre-stage. This causes to achieve the greatest savings in the third stage of the life cycle - during the operational phase of the object.

The scope of LCA can refer to various stages and processes in a product’s life. Depending on the purpose of conducting the LCA, one of two primary means for conducting the LCA can be considered: process-based LCA and economic input-output-based LCA. In terms of each variant, there is a number of options to be considered.

Taking into consideration majority of financial benefits for building construction companies, LCA based tool – Life Cycle Costing (LCC) is worth to promoting and using. LCC provides decision support in selecting a building system or whole-building design based on its financial benefits as opposed to LCA, in which a decision is based on the environmental benefits of a system or design. LCC provides a basis for contrasting initial investments with future costs over a specified period of time. The future costs are discounted back in time to make economic comparisons between different alternative strategies. LCC involves the systematic consideration of all relevant costs and revenues associated with the acquisition and ownership of an asset. In the context of buildings, this consists of initial capital cost, occupation costs, operating costs, and the costs incurred or benefited from its disposal. An LCC analysis is a data-intensive process, and the final outcome is highly dependent on the accessibility, quality, and accuracy of input data.

The use of both LCA and LCC can lead to more holistic decision making. Most building projects are constrained by budgets. In this scenario, LCA will produce results indicating the environmental impacts of different options. The option with least impact is proposed as the best solution based on LCA results, but this option might have a large initial cost. In such a situation, LCC can evaluate the life cycle cost of the option and help in selecting the most suitable option based on a limited budget and calculated payback period, while simultaneously managing environmental impacts.

Generally speaking, the basic principle of the technique is the following.

It is a reduction of total cost of building ownership at the expense of sound increase initial costsat the design and construction stages alongside with the energy-efficient, environmentally friendly technologies and approaches applied in a “green” building. As a result operating costs are substantially reduced at the stage operation of the building, which are on average 75%of the total cost.

It this way it would be reasonable to take the following measures:

- to extend the practice of assessing the value of life-cycle costs;
- to facilitate the procedure of state procurement of innovative, high-tech and resource-efficient products and services;

- to support the initiative to integrate resource efficiency indicators at development of guidelines on the use of evaluation the cost of life-cycle costs.

Referencies

1. National designers association, Method of calculating life cycle costs of the construction considering total costs. - M.: 2014

2. Cole, R.J. and E. Sterner, Reconciling theory and practice of life-cycle costing.- Building Research & Information: 2000

3. International Journal of Architecture, Engineering and Construction, Vol 2, №1:2013

УДК625.7

COMPARING RUSSIAN AND FOREIGN TECHNIQUES OF CONSTRUCTING SNOW ROADS

Serebrenikova J. G., Plakhotnikova M.A.
Scientific supervisor: candidate of technical science Kaizer Yu. F., candidate of technical science Lysannikov A. V.
Scientific instructor:Lobyneva E.I.
Siberian Federal University

Snow roads are constructed to provide transportation network to remote settlements, delivercargo and equipment in severe northern weather conditions. In permafrost areas, snow roads are used during the arctic winter season to provide an improved traffic surface and protect the underlying vegetation and permafrost. Constructing snow roads differs greatly from constructing ones over the subgrade surface on which the road section is placed. Sufficient snow cover and frost depth in the active layer are required to support construction activities.

According to Construction Codes 137-89 [1] constructing snow roads requires that snow road density profile should be over 0,65 g/cc. Density and hardness are the most important snow road characteristics. Density depends on efficiently packing snow crystals, i.e. it depends on the degree to which a volume unit of snow is free from void space. The hardness depends on the tendency of the neighboring crystals to bond each other by ice bridges (sintering). Both density and hardness are metamorphic, i.e. they change with the time and surrounding environmental conditions. Methods for snow road construction need to alter the state of natural metamorphism to accelerate the rate at which density and hardness increase. Those operations will ensure maintenance quality by maximizing snow grain contacts for optimal sintering and minimizing labor and equipment operation hours [2]. Most experiences for constructing snow roads led to the achievement of such values of density and hardness, for this it is necessary to moisten snow preliminarily[3].

There are several snow roads construction techniques. Methods differ from each other and depend on climatic conditions. AtMcMurdo Station, Antarctica roads are constructed by a layered-compaction technology.

Layered-compaction is the most recent technique NCEL (Naval Civil Engineering Laboratory) developed to minimize the number of operators and equipment required. It involves elevating the pavement to a desired height by compacting successive 10-cm layers of snow without using snowmixers. A rotary snowplow is used to gather, process, and deposit the snow material. The recommended basic equipment and construction procedures are summarized below, they include [2,4]:

- The Caterpillar Challenger 95 is a dual-rubber-tracked agricultural tractor modified to operate in harsh Antarctic weather conditions. These tractors are designed to pull agricultural and construction equipment, trailers and sleds.

- LGP D8 tractor. The Caterpillar low ground pressure (LGP) “stretch” D8 bulldozer. The blades are modified for use in deep snow. These stretch D8 tractors were used to haul equipment, personnel and supplies.

- Snow Plane model. The Goose is a custom snow plane used to remove long wavelength “bumps” on snow and ice roads. It is designed to remove snow from the “peaks” of bumps and deposit it in the “valleys” between. The Goose can also be used to scrape snow and

move it laterally from one side of a road to the other.

- A Drag is used to smooth the surface of the snow roads. The drag is most commonly the last piece of construction equipment used during road construction. It is also used to redistribute snow over the road surface following a snow storm or wind event.

- A 50-ton pneumatic-tired load cart is used for deep roller compacting the snow lifts during layered-construction activities.

- A smooth-tired Canadian Foremost Delta III is used to harden the wearing surface of snow roads.

- A 50-ton capacity pneumatic-tired load cart is used to compact a road rut.

Snow road construction technology consists of the following procedures: select and stake the roadbed site; compact and level the roadbed; deposit and shape snow along side of road for containment berms; elevate to grade by compacting successive 10-cm layers of snow blown onto the roadbed; level, finish, and age-harden.

It is essential to deposit, spread, and compact each 10-cm layer during a single work shift. A new road may be built in sections to realize this requirement. This construction method produces a finished pavement that is at least 9.1 mwide and elevated 61 to 76 cm above the surrounding terrain [2].

On the other hand, all these operations may be replaced by a SnowPaver. The SnowPaver combines a cutting, leveling, milling, and vibratory compaction process all in one implement. It is designed to maximize the snow grain contacts for optimal sintering and to minimize labor and equipment operation hours.

In Russia, the construction of snow roads occurs according to the similar scheme.Merdanov [3]presents the technological process of creating roads, which includes the following steps (Fig. 1):

I - clearing the ground from bushes and forests by brush cutters and bulldozers;

II – irrigatingwet areas along the road bottom using all-terrain vehicles with a low specific pressure of running systems;

III - freezing road base removing snow along side of the road using snowploughs and bulldozers;

IV – elevating successive layers of snow blown onto the roadbed. Heresnowblowers are used;

V - hydrating (using watering machines or thermo moisturizing machines and units), and profiling accumulated snow at the base of the roadbed;

VI - layered-compacting snow by trailed pneumatic rollers with preliminary ripping and mixing compacted layers with ribbed rollers;

VII - forming the road surface, drifting anti slippery notches on the road.

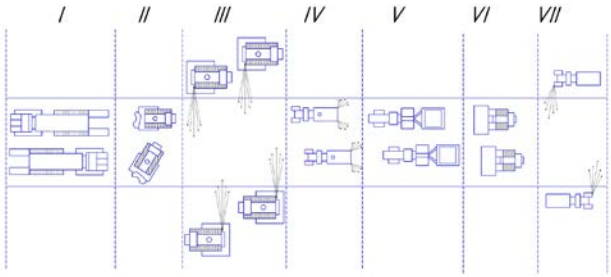

Figure 1. Functional scheme of existing snow road construction technology

When snow roads are constructed over snow fields, it is useful to use special thermal vibration snow compaction unit, operating for 1 pass with hoeing and mixing snow, heat treating the snow mass and vibration compacting. To streamline the process of the snow road construction thermal vibration snowgroomers have been developed, e.g. STM-1, STM-1A MST-0281, STM-2, which have been tested in Antarctica during the construction of the runway, temporary snow roads for the forest industry.

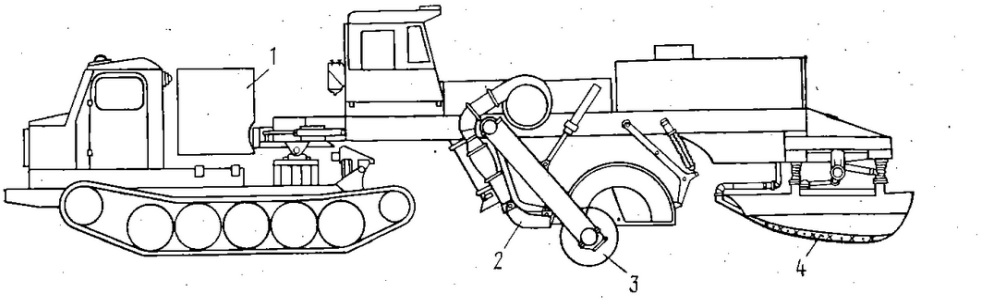

Figure 2. Thermo vibration machine STM-2: 1 tractor, 2 - thermal equipment; 3 - cutter; 4 - vibration gasket

This unit removes snowpack per pass, then undergoesit to heat treatment and vibration compact to obtain the density about 0,7 g/cc, the thickness from 25 to 35 cm and the width of strips 2.8 m.

Thus, the construction technology depends on climatic factors (amount of precipitation, latitude), the destination of the road and traffic.Snow during construction has been subjected to heat treatment and size reduction, i.e. the particle size is reduced and every snowflake is more efficiently melt that eventually lead to the denser road surface, so road constructed with the domestic technology will have extended service life rather than snow road constructed withthe foreign technology. In this case, thesesnow roads are less susceptible to wear and there aren`t no ruts when cars pass.

References

1. Construction Codes 137-89. Design, construction and maintenance of winter roads in Siberia and North-East of the USSR
2. Sally A. Shoop, Gary Phetteplace, and Wendy L. Wieder. Snow Roads at McMurdo Station, Antarctica: ERDC/CRREL TR-10-05
3. Merdanov S. M. Scientific basis for the creation of complex machines for the temporary snow roads construction in the North and Siberia:thesis.doctor of technical. sciences: 05.05.04 /MerdanovShahbubaMagomedkerimovich. - Tyumen, 2010. – 295 p.
4. Sally A. Shoop, Russ Alger, Joel Kunnari, and Wendy L. Wieder. Evaluation of a New SnowPaver at McMurdo Station, Antarctica: ERDC/CRREL TR-14-16

УДК 72.01=111

ADAPTIVE ARCHITECTURAL SPACES: EMERGING TRENDS

A.G. Smirnov, a postgraduate
Scientific supervisor: L. V. Gaikova,
a candidate of architecture, an associate professor
Language supervisor: V. V. Vonog,
a candidate of cultural science, an associate professor
Siberian Federal University

Introduction

Adaptive architecture is a developing field of research and architectural practice. It incorporates many approaches such as responsive architecture, flexible architecture and media architecture. Those approaches are illustrated by various examples implemented in our life or in projects. These projects are relevant, as opposed to research ideas, as their existence has been caused by other circumstances. And practitioner always has to consider current existing techniques, technologies, materials, advancements that they can use to build the project. Therefore, every built adaptive space is an indicator of the state of this field. Analyzing this state might allow us to make predictions about the future and improve our research paths. This paper is devoted to some innovative trends in built adaptive architectural spaces. The trends might be a tool for us to draw some conclusions about the current situation and show us in which way the practice develops in this field. Furthermore, it might show us what research ideas have begun to be realized and which are still impossible to implement.

The literature review shows that examples of adaptive buildings are used for developing conceptual frameworks (Holger, 2010) (Sherbini et al., 2004) and for different approaches such as responsive architecture (Sterk, 2003). These studies are very useful as they show the structure of the field which can be used for analyzing built architectural spaces.

Materials and methods

Frequency analysis was chosen to identify some trends in adaptive architectural spaces. It allowed us to use quantitative method in this research. The quantitative method provided us with certain numerical values and statistical data. It made research less biased as conclusions were based on numerical data rather than on observations. Data was collected from the description of objects. As a result, the information on some variables could not be collected. Therefore, audio and video data complemented textual information.

In this research, we focused on built adaptive architectural spaces and mockups. Most buildings have adaptive parts or spaces whereas in general they remain rather standard. Adaptive parts of buildings in their turn form adaptive architectural spaces. Therefore, using spaces in our study allowed us to create a wider selection of objects. In this research we selected thirty built adaptive spaces.

Built adaptive architectural space is an area, which is strongly influenced by adaptive parts such as facades, walls, ceilings, light, and partition systems. It might be a room, hall or even a part of a street in front of a building.

The selection was analyzed by using certain criteria. Some of the characteristics were adapted from Holger (2010). Those characteristics were the elements of transformation and reaction. The elements of transformation were surfaces, modules, spatial characteristics and technical

systems. Spaces and mockups were also analyzed regarding to what they react: for example occupants, environment or objects.

Other characteristics were developed independently. Those characteristics were the year when an object was built, effect and method of adaptation. The effect of the object could be aimed at comfort, function or the impression of occupants. The method of adaptation means how the space is adapted manually or with the help of sensors and acutators.

Due to the difficulty in searching for adaptive architectural spaces this research might be incomplete as only 30 samples were analyzed. Taking into account that some of the descriptions were not complete, we reconstructed some variables using photo and video data. Textual information was complimented by means of photo and video data. Furthermore, Hogel's classification used in this research might be a pioneering work in this field and it might need to be investigated further to enrich this research.

Results

According to the results the number of adaptive architectural spaces has increased. It means that technologies allow researchers and practitioners to implement new ideas. Due to this process adaptation becomes more popular as a tool because it allows designing buildings which are more effective. Another result indicates that surfaces and spatial features are the most common element of adaptation. It might happen due to the functionality of those elements. Adaptive surfaces allow controlling the amount of sun light and it is rather useful when the leading trend in architecture nowadays is directed to energy economy. This result is connected with another one, which shows that the main effect of adaptation is aimed at occupants to create comfort environment and space that is more functional. Adaptive facades help to create comfortable architectural spaces and adaptation of spatial features provides occupants with spaces that are more functional. Furthermore, we indicated that recent advancements in the field of computational design contributed to a new approach in adaptive architecture – the embedded responsiveness of materials.

Conclusion

It should be noted that in spite of a large number of studies in the field of responsive structural parts and flexible partitions, surfaces and patches of adaptive technologies appear as most common elements, which can be implemented. Therefore further study of the technologies, techniques, methodologies used to design these elements might help us to integrate knowledge and develop new methodologies. These methodologies are essential, as we would be able to use them in educating students and as a result they may drive forward the idea of adaptive architecture.

References

1. Schnädelbach, Holger. "Adaptive Architecture: A Conceptual framework." Proceedings of Media City, 2010.

2. Sherbini, Khaled, and Robert Krawczyk. "Overview of Intelligent Architecture." In 1st ASCAAD International Conference, E-Design in Architecture KFUPM, Dhahran, Saudi Arabia, 2004.

3. Sterk, Tristan. "Using Actuated Tensegrity Structures to Produce a Responsive Architecture." ACADIA 2003, 2003.

УДК 82’06

DUALISM OF RELIGIOUS SYSTEMS IN V. RASPUTIN'S PROSE

Stepanova Vasilina A.
Scientific supervisor Doctor of Philology, professor Kovtun N.V.
Language advisor S. V. Polikarpova
Siberian Federal University

V. Rasputin is a famous Russian writer. His death in the last month means the conclusive end of the period of traditionalism. This literary movement is associated with the utopian perception of the radiant past. Traditionalism is characterized with the intentions of overcoming the chaos of the real world with the possibilities of soul.

Understanding of the writer's world view in literary criticism is ambigious. The majority of the scientists consider the Rasputin's prose in the context of Christian world view (I. Kazanceva, V. Ivanova, N, Smirnova). Works devoted to the analysis of pagan symbols or mythopoetics are rarer (N. Novicova, O. Barysheva, N. Kovtun). The very distinction between research points explains the need to define a problem of embodiment of the author's position in the texts.

The synthesis of binaries is one of the specific features of Rasputin's poetics. This synthesis (or dualism) is embodied in the most significant pairs: life and death (in the writer's poetics life is a preparation for death, and death - a different way of living), Christianity and paganism (researches traditionally pay attention to the elements of folk hagiography in his prose), the opposition of village-city (in the later works the village will incorporate the features of the city), male and female (women are endowed with masculine characteristics and vice versa), chronos and eon (real time in terms of the narrative is in dialogue with eternity), the rite and ritual (meaningful rite may not coincide with its shape), the archetypal and the individual (intellectual character embodies the struggle and unity of two principles).

This article will focus exclusively on representation of religious attitudes in the works of the author. Belief system represented at different levels of the text (from the symbolic to the plot) is complexly organized. First of all, Christian and pagan origin are distinguished. For early Rasputin's prose shamanism as one of the pagan forms is typical: in the story "Ah, the old woman" the old woman couldn't die and leave her clan without the "mystery and power," it is necessary to transfer a gift to someone, the distinction of ritual and its formal side is highlighted. Therefore, the authenticity and sacral contents are significant, on the contrary, the form and expression are not so important. It is noteworthy that in the later works such transformation will occur with the symbolism of the cross: its sacred content will be lost, it will be just a sign, irrelevant in the new system of values, and then it will completely disappear from the text.

Another aspect of paganism is the mythologizing of nature, the relationship with the family (the possibility to talk with ancestors, insights on their graves), in the poetics of Rasputin internal correlation with Christian principles forms a complex synthesis, traditionally referred to as dual faith (one of the varieties - folk hagiography). World outlook dualism is embodied in symbols and rites. Conservative rite is specific for Rasputin's prose: the characters (Kuzma, Owner, Bogodul, Hampo) go around the village for protecting it. However, in later texts rite can be described as imperfect ("did not go around") or carry back a symbolic meaning: deserter Andrew destroyed tribal boundaries by passing outside the village. This is partly due to the transformation of the village image as a model of universe. Funeral rites and attitudes toward death also embody writer's world outlook dualism. The motif of death, which is one of the main storylines, constructs V. Rasputin' prose as a whole. Already in the early stories it is conceptualized in different

ways: death as the end of life ("Old Woman", 1961; "And the ten graves in the forest", 1966), the death as a merger with nature ("In Sayan come with backpacks", 1963). First understanding of death as a release within the metaphysical appeared in the story "Money for Maria" (1967), most fully expressed in the story "The Last Term" (1970). The old woman Anna anticipates her death, besides, she makes arrangement with it. This transition should happen in a dream, in oneyrosphere that has a special significance. The death of the heroine is described in the style of the Ascension. In the story "Farewell to Matyora" (1976) the very island will ascend, it is highlighted with mythologeme of New Jerusalem.

Paganism in the writer's poetics works in indissoluble unity with the Christian faith. Orthodox manifestations of Christianity are not revealed, but the reference to the canonical texts could be found in journalism, where Rasputin just postulates the Christian orientation of Russian culture. In prose Christianity is represented in the dialogue with paganism and includes Old Believer symbols and motifs as well as folk hagiography (dual faith). Images of "Rasputin's old women" are focused on iconographic tradition: thinning, austerity. Heroes are associated allusively with images of saints ("Mother of God" and "sophianic" female characters, "St. George", "Nicholas" complexes), the plot usually develops in accordance with the logic of the Orthodox view of the world, Christian symbols are always presented (in the early texts symbol is functional, in the later - rolls up to a sign). Chronotop focused on church chronology, being key events in the writer's works, take place on the eve of great holidays. Especially often it referred to the events of Christmas, Epiphany and Veil. Many storylines develop in accordance with the logic model of the Christian holidays, they are all somehow connected with death and its overcome, what is the basis of Christianity. It is important to understand the conditional incarnation of festival models. Certainly the text is not built on canon, but the idea of death in Orthodox culture is embodied in the holidays and reflected in the prose.

Presentation of the model of Candlemas and the Assumption embodies in stories about preparing for death. The most complete model is embodied in "The Last Term": waiting for the transition due to the expectation of Anna's daughter. The motif of the need to meet the child for resting duplicates the model of the Candlemas. It is associated with the expectation of feeling the end implied in the title of the story.

Assumption is treated as a "short sleep before the birth of a new life". And in the story the death is directly related to the perception of sleep, so Anna imagine this one: "She will fall asleep not as always, without noticing it, but memorably and lightly - like going the stairs down somewhere" [Rasputin 2007 176]. It's important that the Virgin after the crucifixion of Christ was left in the care of the Apostle St John the Theologian. Anna in the story lives with her younger son Michael who presents a patriarchal type. He is the only child of Anna who remains in sacred space of the parlor beside the dying mother, it is destined to perform the function. Michael entered the traditional paradigm, he accepted his fate which allows the hero not to deny the mystery of death.

Mother of God has been advised of the Archangel Gabriel of impending death, in the works of V. Rasputin this construct is realised: only the righteous receive the right to prepare for death, death is revealed as the gateway to the metaphysical. The old woman Anna aranges with death, it is clearly indicating the synthesis of Christian and pagan philosophical systems. Such a contract is concluded by aunt Natalia, directly named a saint, in the story "Money for Maria."

In the late writer's works the model is extremely minimized, but description of the death of the righteous will also stylistically and symbolically communicate with the Theotokos code. Communication of death with oneyrosphere is one of the topos: Nastyona "falls asleep", old women from Matyora, waking from sleep in the "chicken coop" of Bogodul, feel dead, in the

"Commemoration" Senya falls asleep on the spot in flooded cemetery. The motif of preparation for death continues with the model of Ascension. In the story the heroine is surrounded by sophianic elements: air, sky, sunlight. In fact, the fate of Anna is inscribed in the hagiographic canon during her lifetime. The death of the heroine is a new birth and the transition into a sacred space. As the old woman in the lifetime is endowed with saint traits, association with the Exodus and the Resurrection is not necessary, rather death duplicates the model of the Ascension.

Ascension model will function in the story "Farewell to Matyora". In folk tradition, Ascension and Eve "is considered as the day of the dead": the island has a very clear readiness for death which portends a disaster, all elements are hostile (water - flooding, fire - madness). Island is a Paradise and at the same time the island of the dead. The finale of the narrative is ambiguous. Estimated ascension is duplicated by the description of flooding. Old women feel dead, describing the transition "I flew in the dark, I didn't look out into the world" [Rasputin, 2007, 233]. Fog traditionally is a symbol of the boundaries between the real and the surreal, in Christianity it anticipates Revelation. In fact, the author concludes the text in transition moment: the island rises and moves in a different space. Of course, this plot model duplicates the folk perception of festival, transforming it. In a mature works a construct will be changed more significantly: in "The Hut" death which continues the present will be presented as the gateway to the metaphysical, moving to a different world, but exists within the narrative, space (the same method will be used in "The Vision").

In the late prose the transition from the Old Testament to the New Testament truths is made, Talion law is updated. That is why the Exodus / Resurrection is impossible in the texts of the 1990s - 2000s .: Christ's absence deprives Resurrection. Christianity is implemented at the level of intentions in the dialogue with the pagan, natural models and codes which confirm the duality of the writer's world view.

Recent stories of the author (especially "autobiographical") being largely a response to the crisis of "village prose", are reflection of the traditions, beliefs, principles. A. Pelipenko in the monograph "The dualistic revolution and smyslogenez in history" examines the dualism as the basis of culture as a whole. The researcher notes pattern transition from syncretism to reflexion as the mechanism of development. The universalism of the model is supported by reference to the work of H. Werner, Vygotsky, E. Neumann which also identify this phenomenon. The transition to the reflexion is possible only after reaching a certain stage of development that E. Noymann describes as out of uroboric unity with the world. Reflexion occurs as a result of an attempt of self-identification, one’s isolation from the world. To go to a new syncretism is necessary to remove the opposition (e.g. V. Paperny "Culture 2"). Thus, the reflexion of the writer's religious system which is expressed in prose and in journalism, and dualism of world view positions show loss of syncretism, suggest a new outlet and development, on which there is a hint in the later stories - base, allowing to alive, is no longer faith tradition, but the internal ability of characters to change, however, not to comply with the chaos of the world.

References

1. Pelipenko A. Dualistic revolution and smyslogenez in history. M., 2011.
2. Rasputin V. collected editions in 4 Vols., Irkutsk, 2007.

УДК 621.31.001.76=111

INNOVATION ACTIVITY IN THE FIELD OF ENERGY SAVING TECHNOLOGIES

H. A. Sukiasyan, a post graduate
Scientific supervisor G. Ya. Belyakova, a Doctor of Economics
Language supervisor V. V. Vonog, a Candidate of Cultural Science
Siberian Federal University

This article is devoted to innovation research connected withenergy saving technologies. The necessity of introducing innovations in construction branch is explainedby global ecological problems and competition between companies. In this competition, especially, the role of government in the process of introducing innovations is decisive. Therefore, our aim is to investigate the methods of government support and their effectiveness for innovative activities, particularly for energy-saving technologies.

Energy efficiency is one of the easiest and most cost effective ways to act against the climate change, clean the air we breathe, improve the competitiveness of our businesses and reduce energy costs for consumers.

Experts predict, that moving at such pace we will fully use up stocks of natural energy resources (gas, oil, coal) in the next fifty years. Today the problem of reducing the energy consumption of residential buildings is urgent, which also provides impetus for the development of energy-saving technologies. For heating housesany State spendsalmost 40% of all energy resources of the country.

In many countries, one of the most important objects of state regulation has become a requirement to increase the thermal protection of buildings. In addition to saving energy, these state requirements are designed to protect the environment from harmful emissions, sustainable use of natural resources, reducing the "greenhouse effect".

Energy-saving technologies allow to solve several problems:

- Economy of resources;
- Solution of many problems of housing and communal services;
- Reducing pollution;
- Increasing the profitability of enterprises.

Currently Russia needsmuch to develop for owning energy-saving technologies. According to experts, the Russian Federation has a huge potential to improve energy efficiency, that is, more than 40% of total energy consumption. Russian housesare characterized by very low energy efficiency, therefore energy losses are huge. According to the State Construction Committee, Russia's consumption of thermal energy (heating, hot water) is 74 kg of fuel per square meter per year, which is several times higher in comparison with Europe. The energy consumption of many Russian enterprises are about twice higher than those in developed countries. Although in European countries energy-saving technologies are becoming increasingly popular, in Russia, they are not so popular. One of the main reasons for their slow spread is the lack of interest of homeowners. They are not adequately informed about all the availableways and meansto modernize the housing. There are not enough actions for promoting the construction of energy efficient buildings held by the government apparatus. For example, tax benefits for construction companies are involved in the construction of such housing they may be based by companies producing energy efficient construction materials.

After the adoption of Building code 23-02-2003 "Thermal protection of buildings" the energy efficiency of houses under construction has become higher, but because of insufficient economic incentives, many companies continue to invest in the construction of buildings with low energy efficiency. It gives them an opportunity to save at the expense of energy-efficient construction. These building regulations establish requirements to the level of thermal insulation of buildings in order to save energy.

Judging from the experience of developed countries, the promotion of innovative technologies requires comprehensive approach, improving the existing legislation, development of legal and technical incentives. In addition, it requires the use of economic and legal mechanisms impact on homeowners and construction companies as follows:

• Apart from calling for the economical use of energy, information interventions give specific advice on its economy, as well as description of economic benefits of energy-saving technologies.

• The use of preferential tariff system for low-energy buildings by energy companies increases the number of energy efficient buildings.

• By experience of developed countries, effective measures are considered the right to use tax breaks, getting subsidies to partially cover the costs of introducing technology and loans with lower interest rates.

• Implementation of energy consumption control and prosecution for violations of construction and operation of buildings stimulate building construction companies as well as construction materials producers to adopt energy efficient technologies.

In addition, many developed countries solve the problem of energy security through energy conservation and encourage the development of alternative energy sources. Over a third of the total volume of electricity is produced by wind turbines.

However, there is one more innovative way of decreasing the energy consumption used in building construction. Investors place solar batteries on the roofs of buildings, which cover needs in electricity of homeowners. In the case of electricity surplusthey are able to submit the received energy to the city network. In these buildings heating energy costs are minimized thanks to the use of domestic energy sources. Heating is carried out due to the heat generated by appliances, people, alternative energy sources. Such buildings are called “a passive house”.

In the field of energy efficiency, buildings are significant consumers of energy. According toSmart2020, the worldwide energy consumption for buildings will grow by 45% from 2002 to2025 – where buildings account for about 40% of energy demand with 33% in commercialbuildings and even 67% in residential buildings.

Although variousand numerous control solutions have already been deployed in many commercial buildings, they remain often standalone and proprietary legacy systems. The new sustainable challenges thatbuildings have to face today, foster thedevelopment of new technologies and new solutions, which will drastically change our futurebuilt environment.

Governments use various methods of supporting the development of energy-efficiency. Regulations and financial incentives (e.g. taxation relief, energy feed-in tariffs) are commonmethods (regarding to energy efficiency policies and measures) used by governments to reduceor suppress costs of new technologies implementation at the consumer level. However, these methodshaven’t found a wide application according to their aims, therefore, governments continue to develop new effective methods of supporting innovations in their countries.

УДК 005.5:339.37=111

THEORETICAL ASPECTS OF BUSINESS PROCESSES AT THE ENTERPRISES OF RETAIL TRADE.

M. D. Udin, a post-graduate
Scientific Supervisor: N. N. Tereshchenko, a doctor of Economic Science
Language Supervisor: V. V. Vonog, a Candidate of Cultural Science
Siberian Federal University

In modern conditions of the changing environment a fast response to changes and the corresponding introduction of adequate measures in the organization and implementation of own entrepreneurial activity becomes the main task of any enterprise. The basis of the activity of any organization is made by business processes, which are defined by the purposes and problems of the enterprise activity.

What does the concept "business process" mean? Business process has been investigated by various foreign scientists. So, from the point of view of Andersen Bjørn, business process is some logical sequence of the connected actions which will transform an entrance to results or an exit. Ericsson Quality Institute is mentioned in Bjørn's scientific work which treats business process as a chain of logically connected, repeating actions. They are considered to be a result of using resources of the enterprise applied for processing of an object "physically or virtually). This is done to achieve certain measurable results or production for meeting needs of internal or external consumers. . It should be noted that comparing these two offered definitions, it becomes clear that, firstly, business process means the certain schedule of actions made by the organization which involves in it its own opportunities and resources.

Moreover "business" plays a key role here - the organization or the enterprise follows the strictly certain vector of development which is meant as its economic activity, whether it be rendering services, works, production or trade in goods in the wholesale or retail environment which ultimate goal can be defined as receiving profit.

The definitions of business processes offered by Russian scientists in many respects are similar to the point of view of foreign authors. For example, V. G. Eliferov and V. V. Repin consider that business process is a steady, purposeful set of the interconnected kinds of activity which on a certain technology will transform entrances to the exits which are of value for the consumer. Their foreign colleagues M. Hammer and J. Champi also give the definition that "entrance" is that other as the beginning of the process, respectively "exit" is a result of the done work which can be profit alongside with the expansion of enterprise borders, essential increase in the client base of the organization and so on. However, eventually all this leads to profit or maximizing in theoretical terms. Generalizing all above written points, it is possible to make the assumption that business processes are a set of steps, decisions, actions of the enterprise or organization which leads to receiving profit.

Functioning of the enterprise often retail trade in modern conditions means transition of the offered goods to an ultimate consumer. It is supposed to act against quite high competition that is why it is extremely important to select or develop the methods and mechanisms of management of business processes for such an enterprise. Being arranged under nearly hourly

changing environmental conditions as otherwise this enterprise is certain to experience crash and leave the market. Therefore the administrative personnel should constantly be advanced, looking for new ways of development to achieve objectives.

Thus, generalization and reconsideration of scientific approaches of domestic and foreign economists to the considered problem allow to designate the understanding of business process at the enterprise of retail trade: "business process represents planned, subject to repeated changes under the influence of factors of the external and internal environment, algorithm of the interconnected and mutually influencing actions in which all resources of the organization are involved, directed on satisfaction of demand of clients (consumers) and receiving (maximizing) profit.

References

1. A. V. Petrova. Bulletin of the Chelyabinsk state university. 2009. No. 9 (147). Economy. Vyp. 20. 108-112 pages.

2. Hammer M., Champi of J. Reengineering of corporations: the manifesto of revolution in business. SPb.: Publishing house S-Peter. un-that, 1977. — 160 pages.

3. Andersen of Byyorn Business-protsessa. Instruments of improvement. / the Lane with English S. V. Arinicheva/Nauch. edition Yu.P. Adler M.: RIA "Standards and Quality", 2003 — 24 pages silt. — (Practical Management series).

4. Ericsson Quality Institute. Business Process Management. Ericsson, Gothenburg Sweden, 1993. — 170 pages.

5. V. G. Eliferov. V. V. Repin. "Business processes. A regulation and management", publishing house of INFRA-M, the textbook for the MBA program. 2005 - 17 pages.

УДК 665.7.032: 662.613.128

DIE HERSTELLUNG VOM ALTERNATIVEN BINDEMITTEL FÜR DIE ANODEN DER SODERBERG- ELEKTROLYSEANLAGE DURCH THERMISCHE AUFLÖSUNG DER KOHLE

Vaganov R.A., Buza A.O.
Wissenschaftliche Betreuer: Dr.-Ing. Buryukin F.A., SFU Grinko D.A., Lehrstuhle für Fremdsprachen für naturwissenschaftlichen Richtungen, SFU
Sibirische Föderale Universität

Die wichtigste Komponente bei der Herstellung verschiedener Arten von Kohlenstoffmaterialien ist das Steinkohlenteerpech und die daraus erhaltenen Bindemittel.

Die Hauptverbraucher vom Steinkohlenteerpech ist die Aluminiumindustrie. Derzeit herrscht auf dem Markt ein großer Mangel am Steinkohlenteerpech, der aus China meistens geliefert wird. Es sei betont, dass sein Wert mit jedem Jahr wächst, und seine Qualität dagegen bleibt zu niedrig. Außerdem enthält das Kohlenpech eine große Menge von schädlichen, karzinogenen, polykondensierten, aromatischen Mitteln, einschließlich Benz(a)pyren.

Derzeit erhält man das Pech aus dem Steinkohlenteer, der ein Nebenprodukt von der Hochtemperatur-Verkokung bei der Koksherstellung ist. Der Steinkohlenteer enthält überwiegend ein Gemisch von bi- und polykondensierten aromatischen Kohlenwasserstoffen und der Verbindungen mit den Heteroatomen in den Ringen. Die Pechausbeute beträgt im Durchschnitt etwa 2%. Beim Raumtemperatur ist das Pech ein homogener und äußerlich fester Stoff, der aus einem Gemisch von polykondensierten aromatischen Kohlenwasserstoffen mit der Anzahl von aromatischen Ringen von 4 oder mehr besteht.

Die Herstellung vom alternativen Pech im Ausland basiert auf der Verwendung von Erdölausgangsmaterialien. Das Erdölpech ist umweltfreundlicher, weil er relativ geringere Menge von karzinogenen polykondensierten aromatischen Kohlenwasserstoffen hat. Allerdings hat er auch nicht genügende physikalische und mechanische Eigenschaften.

Alternative Methoden zur Herstellung von Steinkohlenteerpech

Um das Problem des Pechmangels zu lösen, ist es zweckmäßig, ein neues aufgrund der pyrolitischen und thermochemischen Kohlenverarbeitung basiertes Herstellungsverfahren zu entwickeln.

Derzeit gibt es verschiedene Verfahren zur Umwandlung von Kohle zu flüssigen Produkten:

- Heiße Zentrifugation von Steinkohle
- Semicoking-Prozesse
- Katalytische Hydrierung
- Thermische Auflösung

Besonders interessant für die Herstellung des alternativen Pechs, das den Steinkohlenpech ersetzen kann, sind die Prozesse der thermochemischen Kohlenverarbeitung in den organischen Lösungsmitteln.

Der Prozess der thermischen Kohlenauflösung verläuft bei Temperaturen von 350-450 °C. Die Umwandlung des organischen Kohlenstoffes zu einem flüssigen und zu lösenden Stoff braucht ein gutes und dazu geeignetes Lösungsmittel.

Ein wirksames Lösungsmittel ist Anthracenöl, das Wirkstoffe-Cosolventien enthält. Seine Wirkung basiert auf der Anwesenheit von Wasserstoff-Donoren (Acenaphthen,

Dihydroanthracen, Fluoren, Carbazol), Wasserstoffüberträger (Fluoranthen) und von Verbindung mit solvatisierenden Eigenschaften (Indol).

Herstellung der dem Pech ähnlichen Produkte durch thermische Auflösung in Labor.

Hochsiedende und schwerflüchtige Fraktionen, die bei den traditionellen thermischen Kohlenauflösung erhalten werden, können als Quelle für die Herstellung der Pechprodukte dienen.

Abbildung 1 zeigt ein allgemeines Blockschaltbild der Anlage für die thermische Kohlenauflösung. Das Gerät ist entwickelt, um Experimente von den thermische Kohlenauflösung in einer inerten Atmosphäre bei Temperaturen von 400 bis 420 °C durchzuführen.

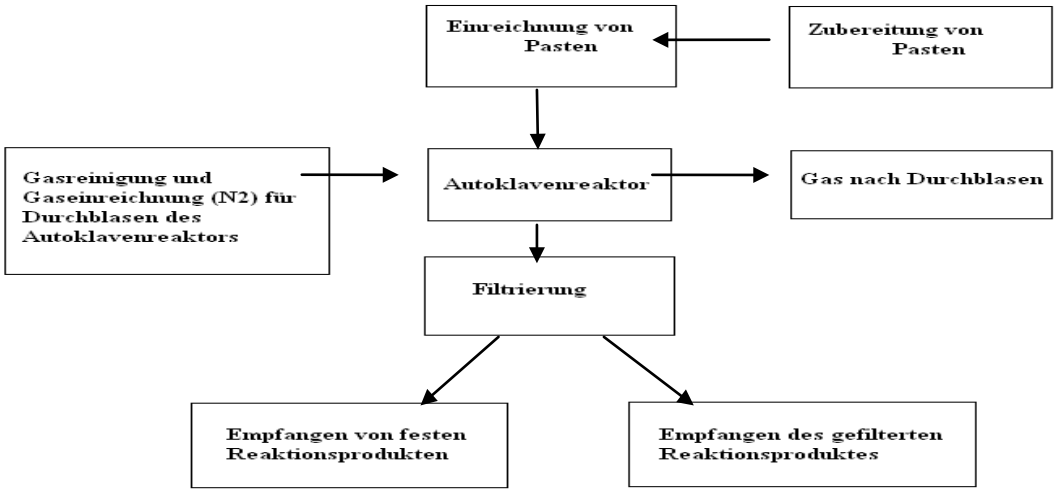

Abbildung 1. Das Blockschaltbild der Anlage für die thermische Kohlenauflösung.

Als Ausgangstoff wurde metamorphisierte Kohle (russisch genannt ЖР, Chertinskaja-Grube in Kuzbass) verwendet. Der Kohlenumsetzungsgrad betrug 68%, Kohlenstoffpechausbeute von der gesamten Menge der flüssigen Produkte betrug 70%. Der Gehalt von Benz(a)pyren im erhaltenen Pech ist 3 mal niedriger im Vergleich zum Steinkohlenteer. Die Erweichungstemperatur des Pechs ist 98 ^{0}C, der Gehalt von flüchtigen Stoffen ist 56%, der Aschengehalt ist etwa 0,1%. Das resultierende Pech unterscheidet sich von traditionellen Steinkohlenteerpech durch die Gruppenzusammensetzung. Um diese zu optimieren, wurde vorgeschlagen, den Nanomodifikationsprozess mit Fulleren-Moleküle durchzuführen.

Die Schlussfolgerung

Also, die guten Aussichten hat das Verfahren der thermischen Auflösung der Kohle. Dieses Verfahren ist durch eine einfache Technologie, eine ziemlich große Ausbeute und hohe Qualität der Produkte gekennzeichnet. Dazu werden teuere Katalysatoren und Wasserstoff nicht verwendet. Als Rohstoffe können Stein- und Braunkohle dienen.

Für die Verbesserung der Gruppenzusammensetzung des Steinkohlenteerpechs ist die Nanomodifikationsprozess von Fulleren-Moleküle zu verwenden. Die Entwicklungen auf diesem Gebiet werden im Labor des Instituts für Öl und Gas Sibirische Föderale Universität durchgeführt.

Referenzen

1. Сидоров О.Ф. // Кокс и химия. 2006. № 6. С.36.
2. Маракушина Е.Н., Храменко С.А., Голоунин А.В. // Кокс и химия. 2010. № 3. С.32.
3. Объединение независимых экспертов в области минеральных ресурсов, металлургии и химической промышленности. Обзор рынка каменноугольной смолы в СНГ Издание 2-ое, дополненное и переработанное. М.: 2010. 18 с. URL: http://www.infomine.ru/files/catalog/185/file_185.pdf

УДК 82

THE MOTIVE OF WANDERING IN THE PROSE OF M. A. TARKOVSKY

Val'yanov N. A.,
scientific supervisor Doctor of Philology Kovtun N. V.
language advisor Polikarpova S. V.
Siberian Federal University

Wandering as a historical and sociocultural phenomenon defines the essence of the Russian national character. It is particular world view and philosophy [5]. An inclination of Russian nation to the wandering life to search for something new and unknown in a strange land establishes the image of nomad who seeks to leave the native land in search for truth or a better life. The researcher L. G. Smirnyagin introduces the concept of "mental mobility" based on a longing for the "promised land" as an ability to change life radically [3; 79].

An unconscious dream of the Russian soul about "a new kingdom and a better place" [5] defines the appropriate lifestyle, so the type of wanderer is formed – free and wonderful man, combining "the greatness of Russian nation and its calling to the higher life..." [1; 27].

The researchers N. V. Kovtun and V. A. Stepanova believe that the hero-wanderer is on the border of worlds – being associated with fornication, indifference and hopes to escape from it in the way [2].

It should be noted that the representatives of Russian literature (poets, writers and publicists) have always paid their particular attention to the type of wanderer. This image is actual for the modern Russian prose. So, the motive of wandering is realized in small prose of a traditionalist M. A. Tarkovsky most fully and deeply. In this respect the story "Petrovich" is illustrative and should be attributed to the mature prose of the Siberian writer.

The motive of wandering structures the plot outline of the literary work and artistically frames the narrative in whole. This motive is stated in the "village prose" of the second half of the XX century. The main character of the narrative is a fifty-year old man Petrovich who having quarreled with a woman decides to leave Bakhta and to return to their native land where he buried his mother and left his first family. Often in the traditional art the small native land is a "promised land" which helps the character to find true happiness, vocation and gives a new life. The hopes of the protagonist who leaves his native village in search for the "blessed land" are initially pointless. Petrovich realizes that he will not find happiness elsewhere: "Leaving Bakhta, [he] has understood deep down that he will not have a better life..." [4; 6]. Petrovich is internally ready to leave – circumstances force him: he quarreled with his wife, lost his friends hunters and left work.

The text is full of apocalyptic motifs – everything collapses, ending his own life. The decomposition of the sacral world-image by leaving the homeland, which is sacred territory, results in the discord with life. The wandering in a foreign land does not help the character to find and to define himself – discord with life continues. The character was originally announced as marginal – the author creates the *image of wanderer* who "feels the imprint of incorrigible loneliness and homeless person..." [4; 341]. He faces a choice as at crossroads: "The fact that a homeland is somewhere far away warmed him, and vice versa, hurt and bifurcated him" [4; 6]. The permanent wanderings (Petrovich worked as a tractor driver in different expeditions) determine the nomadic lifestyle of the character. The departure from home and homeland is associated with a death of character, his transition in a strange, unknown space ("Petrovich felt as if he has been buried alive"). There is one more symbol of the character's death: when Petrovich

is sent to the West that is tantamount to sundown and thus, to his ruin. The road he walks subconsciously returns him to the past life: firstly he visited the sister, then his brother and then comes to his daughter and ex-wife, finally visiting his mother's grave. At the beginning of the narrative the author emphasizes the "better times", the thought of which always warmed Petrovich – the consciousness of the hero lives in the past. In fact, his walking in the foreign land is an attempt to relive a part of life, and then to return to the "glorious and antediluvian" times in Bakhta when everything was possible. Thus, the author reconstructs the myth of the "Soviet communist past", imbued with the spirit of collectivism, justice and the idea of universal brotherhood. The collapse of the history of entire population is reduced to a tragedy of fate and personality.

The text is filled with hopelessness of human existence. The scene on the train is very picturesque: Petrovich gets on the train under cover of darkness and meets two disfigured people: chauffeur Serega "with a round, red face and a scar on his cheek" who is talking constantly nonsense with "nervousness and hysteria" and "creepy-looking girl, black, in black shirt, with huge tits hanging at different levels". The atmosphere of debauchery and lust resembles hell. The image of this underground space is complemented by a description of the night and the tunnel as endless painful road. The meeting with a driver from Moscow on train is not accidental: Serega as Petrovich left his native village and moved to the city having given their land to strangers (moldavans) who devastated it and took all forest resources. Petrovich, having left the house, thus exposes their land to violence of capturing. The phrase said by Serega ("Trovich, we are of one blood") marks not the idea of universal brotherhood but a special refugee status who neglects village values.

On the way Petrovich serves people, for example in a train he prevents Serega from sin, helps his brother to block the bathhouse, folds a neighbor’s stove. In a foreign land the character enjoys work on the ground because it is his true calling. But he continues to feel lonely and unnecessary as long as he does not meet the righteous traveler (Pavlik) who welcomes and then sees off to the way home. A village light keeper Pavel is "the soul of the whole village" who has "exceptional gift of hospitality" and refers to the image of the Apostle Paul who opens the gates to paradise for the righteous. The family of Pavlik is full of harmony and idyll: "... light lit whitewashed walls. The children slept. The quiet Irina and Pavlik were sitting on the bench an accordion was standing on a stool" [4; 9].

The plot has frame composition – the return of the hero to his homeland is appeal to the origins of folk and true being. It’s a typical for Tarkovsky because it marks the writer's loyalty to tradition and ideals. Wandering is a trial for the characters of Tarkovsky.

Petrovich can’t find the personal salvation in his journey, the final scene of the hero's return to Bakhta marking the end of the old life and heralding the beginning of a new one. Petrovich decides to start a new life, "I won’t return to the woman, I will stay with Pavlik, and then will build the house" [4; 10]. So the central image of the story is related to the author's idea of the return / revival of the glorious time and the former tradition.

References

1. Berdyaev N. A. Sud'ba Rossii (The fate of Russia). M.: OOO "Publishing AST" 2004, 333 p.

2. Kovtun N. V., Stepanova V. A. Problema gendernoy identifikatsii muzhskikh obrazov v tvorchestve V. Rasputina: dualizm psikhicheski-intellektual'nykh dominant (The problem of gender identity of male images in the works of Rasputin: the dualism of mental and intellectual dominant) // The Philology class. № 2 (36). 2014, pp 7-14.

3. Smirnyagin L. G. Russkiye v prostranstve i prostranstvo v russkikh (Russian in space and space in the Russian) // Knowledge is force. № 3. 1995, pp 73-80.

4. Tarkovsky M. A. Izbrannoye (The Favorites). Novosibirsk. The Publishing House "Historical Heritage of Siberia". 2014, 496 p.

5. Vysheslavtsev B. P. Russkiy natsional'nyy kharakter (The Russian national character) // Problems of Philosophy. № 6. 1995, pp. 111-122.

УДК 628.349=111

METHODS APPLIED IN INDUSTRY IN ORDER TO REDUCE POLLUTION WASTEWATER CONTAINING EMULSIFIED OIL PRODUCTS.

A. F. Alexandrova, V. S. Nikitin, P. A. Gromov
Scientific supervisor: R. T. Emelyanov, a professor, a Doctor of Technical Science
Language supervisor: V. V. Vonog, an associate professor
Siberian Federal University

The topicality of this research is explained by environmental problems that are caused by human activity. Many industries have adopted the strategy of reducing anthropogenic impact on the environment alongside with reducing water consumption by means of creating a closed system that eliminates the formation of solid and liquid waste treatment facilities. These processes lead to the inevitable premature wear of the abatement equipment.

At the moment, none of the existing pollutants can be compared with oil and oil products according to the spread, the number of sources of pollution and the degrees of stress affected all components of the environment.

All this makes it necessary to develop special methods of processing oily wastewater from a regional perspective.

Wastewater contained emulsified oil provides one of the most difficult problems in the field of disposal of oily wastewater. It is known that the use of soluble anodes for wastewater treatment from emulsified oil provides high cleaning effect [1].

The Department of engineering systems of buildings and structures Civil Engineering Institute has studied the process of anodic dissolution models of wastewater containing emulsified oil in a laboratory in a dynamic mode.

Experiments were conducted on a second order rotatable plan Box - Hunter that allowed us to obtain the regression coefficients with the same variance estimation.

The factors that affect the process of electric treatment of wastewater, adopted the following: X_1 - the initial concentration of emulsified oil in the effluent, mg / l; X_2 - the current density, A / m; X_3 - contact time, min. Layout options are shown in Table 1.

Factors and their varying levels were based on preliminary experiments. Among the evaluation criteria electrocoagulation treatment masloemulsionnyh wastewater were included: Y_1 - residual oil concentration in the effluent leaving the electrocautery, mg / l; Y_2 - specific energy consumption, kWh / m³; Y_3 - metal consumption, g / m³.

After the experimental data of calculation regression equations, the adequacy of which was verified by the Fisher test.

The equations are as follows:

$$У_1 = 9{,}4 + 2{,}1X_1 - 4{,}8X_2 - 0{,}95X_1X_2 - 1{,}9X_1X_3 + 2{,}1X_2X_3 - 1{,}1X_3^2;$$

$$У_2 = 4{,}75 + 4{,}16X_2 - 3{,}24X_3 - 0{,}23X_1X_2 + 0{,}27X_1X_3 - 1{,}96X_2X_3 + 0{,}56X_2^2 + 1{,}41X_3^2;$$

$$У_3 = 116{,}01 + 11{,}22X_1 + 48{,}13X_2 - 84{,}03X_3 + 13{,}43X_1X_2 - 24{,}53X_2X_3 - 8{,}49X_1^2 + 53{,}5X_3^2.$$

To find the optimal mode when managing electroprocessing masloemulsionnyh drains on regression equations have been optimized for the dissociative-step method [2].

Table 1. Factors and their levels of variation

	+1,68	+1	0	- 1	- 1,68
X_1	1204	1000	700	400	196
X_2	60	45	30	13	3
X_3	3,68	3	2	1	0,3

It should be noted that the best effect of sewage water containing emulsified oil in the dynamic mode at the lowest cost of electricity can be achieved in two ways. However, the most economical variant is to carry out the process at high current and less processing time. As shown by the results of studies: with increasing concentration of emulsified oil, a shift in the optimum range of smaller values of the current density and the greater the processing time for the same depth of purification.

The Department of engineering systems of buildings and structures Civil Engineering Institute conducted research in the processing model of oily waste aluminum oxychloride. Aluminum oxychloride $Al_2(OH)_5Cl$ Ч $6H_2O$ was prepared by dissolving freshly precipitated $A1(OH)_3$ in 0.5 - 1% HC1 solution.

Working solution that modifies the waste liquid with a given composition and properties was prepared from emulsol-SP-3.

Design of experiments conducted on the plan of the second order rototabelnomu Box-Hunter, which involves the simultaneous study of all the parameters that affect the process.

This method allows to determine the degree of interaction between the experimental parameters and significantly reduce the total number of trials, as well as to obtain the regression coefficients with the same assessment of dispersion.

In order to exclude the effect of systematically acting factors that are difficult to control and accounting, performed randomization plan, according to a table of random numbers.

The factors that affect the process of chemical treatment of oily waste, adopted the following: X_1 - the initial concentration of emulsified oil in the effluent, mg / dmi; X_2 - The dose of aluminum oxychloride on $A1_2O_3$ mg / dmi; X_3 - pH. Varying parameters are listed in Table 2.

Factors and their varying levels were chosen based on preliminary experiments. Among the evaluation the following criteria are included: Y_1 - residual concentration of oil, mg / dm³; Y_2 - the volume of sludge, %.

$$Y_1= 0,1\cdot(2E\text{-}06X_1^2-0,002X_1+1,0912)\cdot(8E\text{-}05X_2^2-0,0296X_2+3,9467)\cdot(1,2237X_3^2-$$
$$-18,25X_3+68,963)$$
$$Y_2= 0,04\ (2E\text{-}0,5X_1^2-0,0253X_1+15,516)\cdot(7E\text{-}0,5X_2^2-0,0239X_2+3,0522)\cdot$$
$$(-2,4913X_3^2+36,74X_3-132,76)$$

Table 2. Factors and their levels of varying

	+1,68	+1	0	- 1	- 1,68
X_1	1204	1000	700	400	196
X_2	276	240	190	140	106
X_3	8,16	8,0	7,5	7,0	6,6

The outcomes have allowed us to describe the process of oily wastewater mathematically and to determine the optimal treatment regimens, as well as to identify the optimal dose: $Al_2(OH)_5Cl$ − 0,3-0,35g. 1 of emulsified oil, the optimum pH = 7.5.

It should be noted that according to results these studies allow us to construct the adjustment chart of oily wastewater, which will automate the process and achieve significant savings, as well as to achieve a high cleaning effect.

By comparing two methods we can conclude that the most rational option is a flow chart of electrocoagulation oily waste water with applied asymmetric current. All this explains necessity to develop special methods of processing of oily wastewater taking into account a regional perspective.

References

1. T. I. Halturina. Study on the technology of electrochemical treatment of wastewater containing emulsified oil / T. I. Halturina, T. N. Rudenko, O. V. Churbakova // Proceedings of the universities. Construction. 2008, № 8. 56-60 p.

2. V. A. Ascension. Making decisions on statistical models / V. A. Voznesensky, A. F. Kovalchuk, M: Statistics, 1978. 91 p.

УДК 339.138=111

MARKETING METHODS USED IN THE MODERN TRADE CHANNEL.

I. M. Batraeva, a post-graduate
Scientific supervisor: Yu. Yu. Suslova, an associate professor, a Doctor of Economic science
Language supervisor: Vonog V. V., an associate professor
Siberian Federal University

In the modern business community the trade is the main field of activity, the main direction for opening and developing the commercial enterprises. It is difficult to overestimate a trade role for the modern society, after all it provides us to all necessary things, beginning from resources and finishing with products of daily demand, gives the workplaces and tax revenues in the budget, the turn of retail trade is GDP part of the country, also trade stimulates the volume of consumer crediting that positively affects banking and financial systems.

The sphere of trade in Russia is at the peak of its development. The number of trade enterprises of different scale increases from year to year. For example, in 2012 the area of Krasnoyarsk Territory 22 212 enterprises of retail trade were registered, in 2013 their number increased by 5% and corresponded to 23 377 enterprises, and in 2014 the number of the enterprises of retail trade had already corresponded to 23 905 units. [5]

In a consequence of rather recent transition of the Russian economy to mechanisms of market regulation (unlike the western countries) scales of activities and quality of service of buyers are far at the level from an ideal. Since 2005 trade enterprises have placed emphasis on building floor spaces, increasing a number of trade enterprises that can be always justified by expansion of the range. But now, considering an economic situation in the country and consumer moods, the speech comes about change of positioning strategy and fight for the buyer through quality of the provided goods and service. The greatest role in this process is played by the trade marketing directed on sales promotion. For effective implementation of strategy it is necessary to address to experience of the large foreign companies which practice many years in the activities and develop different technologies of trade. [3]

Integrated modern technologies in trade can be divided into several types. The first type represents the information unit where the following can be included:

1. ATL and BTL advertizing. [4]

ATL (Above the line) advertising is the complex of marketing communications including traditional (classical) types of advertizing. ATL advertizing consists of traditional mass media — the press, radio, television, outside and internal, and also polygraphic advertising. Such advertizing envelops a wide range of the population, is available for a great amount of people and bears in itself the main information on the enterprise.

BTL (Below the line) advertising is a complex of the marketing communications different from the direct advertising ATL. The difference is achieved by the level of impact on customers and a choice of levers on target audience. We may add sales promotion, merchandising, POS materials (POS – Point of Sale, a sale point), direct mail (direct mailing groups), exhibitions, tastings, placement of testers, etc. This advertising bears in itself a message to purchase and is directed on a certain buyer, has personal character, the place of influence is directly at a sale place where the decision on purchase is made.

Now the trading companies prefer to use in the policy both types of advertising, for attracting a larger number of potential buyers. This strategy is called "Support of 360 degrees".

2. The Internet. Realities of the modern society dictate the quickest access to information available about different goods and services that are necessary for the buyer because they provide him with a frequent access for any purchase. Here it is possible to mark development of the Internet site where there is some information about the shop, all range of the sold goods, and also system of the electronic payments allowing to pay purchase is placed. Primary benefits for buyers mean an opportunity to find necessary goods at the most acceptable price, to avoid impulse unnecessary purchases, to spare time. For trade enterprises existence of similar electronic system of purchases allows to cut significantly expenses on advertizing, quickly to inform the buyer all information on operation of shop (change of the range, an action, a novelty, etc.), to receive back coupling from the buyer about quality of the sold goods that in its turn allows to make business the most effective and demanded.

The second type of the modern technologies of trade is an art of any merchandising. [1] It is a complex of the actions made in a trading floor and directed on advance of these or those goods or a trademark. It deals with the process of purchase and is aimed at making impact on behavior of the buyer who already is on a place of sale of goods. Here is the calculation of goods according to standards of manufacturing company, operation with visual acceptability of goods, monitoring over that the buyer acquired goods with an acceptable time limit of the conformance. Everything is done to stimulate the consumer to buy these goods, this vendor. The technology of merchandising is based on movement of a consumer flow in an outlet, the rule of "a gold shelf" (the most sold goods by all means shall settle down at the level of eyes of the potential buyer), window dressings for the maximum stimulation of impulse purchases.

The third type of the modern technologies – discount programs. Shops develop a certain program of discounts and loyalty for the regular customers acting within a certain system.

All cards can be classified by the principle of operation on estimated and diagrams of loyalty.

Estimated cards most often work according to the diagram of an advance payment. It allows setting a scale of discounts depending on residual on the account of a card holder. This information can be stored on a magnetic band of a card or in a microchip. The residual on the account is higher; the size of the provided discount is deeper.

The classical diagram of loyalty consists in computation of special prize-winning points which quantity depends on purchase cost, and receiving a one-time discount. The card usually is given free of charge. Here different options are possible – provision of an initial discount and its increase in process of accumulation of bonuses, output of a card depending on the amount of perfect purchases and, respectively, oscillations of a discount depending on it, the price of a card and a discount according to the validity period.

The modern information technologies turn discount programs into opportunity not only to bind the buyer to a certain shop, but also to collect information about the consumer, his preferences and purchases that further allows to attract it in shop on a constant basis.

The fourth type of technologies is connected with safety of goods. The sales channel named Modern Trade was developed greatly last years. Shops of this channel are characterized as self-service shops. Popularity of the Modern Trade channel grows every day, after all such format allows the buyer to leave the most satisfied with the purchases. The main essence of such organization of outlets consists of that the buyer independently selects goods necessary to him, he packs it up and weighs it, he prints the price tags himself, sometimes he even pays for goods at cash register himself. Unfortunately, such trust promotes not only loyalty of buyers, but also theft. Though, contrary to ordinary judgement, more often the cases of theft are registered among the trade and warehouse staff, but not among the buyers. To fight against the theft the large

trading companies use the special equipment against thefts. The system is called as EAS (Electronic Article Surveillance). [2] The principle of operation of this system — detection of the special protective element (a label or a tag) fixed on secured goods. Detection happens in the field between the antenna frames located on boundary of a securable zone. It reduces the risk of theft.

Today there is a large number of the enterprises of retail trade that function in different formats in the Russian Federation. This market is certain to characterize as saturated. Therefore any, even the lowest, competitive advantage (which is especially connected with the saving time and quality of the provided information) turns into a fight element for loyalty of any customer and, certainly, stimulates the development of the quality of the provided goods and services.

References.

1. Бун, Луис Современный маркетинг: учеб. для студентов вузов, обучающихся по специальности экономики и упр. «060000» и «Коммерция» (351300) / Луис Бун, Дэвид Куртц; пер. с англ. [В.Н.Егорова]. – 11-е изд., перераб. и доп. – М.: ЮНИТИ-ДАНА, 2012. – 1039 с. – (Серия «Зарубежный учебник»). – Доп. тит. Лист англ.
2. Журнал «Практический маркетинг» №5 2013 г.
3. М.Г. Федотова КОММУНИКАЦИОННЫЙ МЕНЕДЖМЕНТ: Учебное пособие - Омск: Изд-во ОмГТУ, 2006.
4. https://ru.wikipedia.org/wiki
5. http://krasstat.gks.ru/

УДК 539.21

NUMERICAL SIMULATION OF EXCITATION ENERGY TRANSFER IN MOLECULAR AGGREGATES

Andrey A. Zimin, Nina Yu. Ignatova, Viktoriya V. Savchenko
Научный руководитель канд. физ.-мат. наук Полютов С.П.
Siberian Federal University, Laboratory for Nonlinear Optics and Spectroscopy

Modern electronic devices based on semiconductors are about to face physical limitations on their size and operating speed, and several newly emerging fields such as photonics, plasmonics and spintronics are on their way to substitute the conventional electronics and enter the teraherz operating frequency range. There is a major obstacle in modern science related to the quest for renewable energy sources, where water and hydrogen-based energetics may be the promising solution. Besides, nature has evolved mechanisms to solve these problems in the photosynthesis process – an extremely elaborate way to harvest sunlight, transmit its energy as a collective excitation and split water molecule to store energy. The so-called photosynthetic light-harvesting complex (LHC) is responsible for about 100% efficient and ultra-fast excitation energy transfer occurring on a femtosecond time scale. The LHC contains several molecular building blocks arranged in either organized fashion (in photosynthetic bacteria) or in a seemingly disordered way (in plants) [1]. These building blocks interact with each other and form an aggregate, which is excited by sunlight collectively, i.e. as a whole. Understanding the physics behind the excitation energy transfer process in molecular aggregates is thus a promising way towards practical development of the renewable energy sources.

In this paper we use term “exciton” referring to the collective excitation of the molecular aggregate. This term should not be confused with excitons arising in the condensed matter physics. The so-called Frenkel exciton, where the excitation is localized in a single unit cell, is the closest analogy we can get. Exciton in condensed matter sense can exist only in crystals. However, the mathematical description of the excitons in molecular aggregates is based on the Frenkel exciton theory.

Molecular aggregates are used not only in photosynthesis, but are also applied in a variety of fields including nonlinear optical applications (e.g. photon upconversion, FRET “spectroscopic ruler”, and so on). Theoretical description of the excitation transfer process in molecular aggregates could be based on several approaches – conventional quantum-chemical approach, exciton diffusion function formalism, multi-configurational time-dependent Hartree (MCTDH), and the displaced harmonic oscillators model which we focus on in this paper. While quantum-chemical approaches scale badly and suffer from size-consistency problem and fail to treat intermolecular interaction correctly, the exciton diffusion function and MCTDH can’t track the excited state dynamics back to the monomeric states. Compared to the displaced harmonic oscillators model, all of these methods except for MCTDH are hard to employ for the description of multi-mode and finite-temperature effects.

In the displaced harmonic oscillators approach, we model single monomer as a set of harmonic oscillators displaced along given normal mode coordinate – one for the ground state, one for the excited state. Consideration of vibrational degrees of freedom is therefore straightforward and allows to study the vibronically coupled aggregates. Incorporation of finite-temperature effects is done easily by assuming the Bose-Einstein statistics for excitons. We make a few assumptions to simplify the model and illuminate the relevant physics behind the experiment. Firstly, we assume that monomers are well-separated, so there is (1) no overlap between monomeric wavefunctions and hence no exchange interaction term, and (2) the Coulomb interaction term between monomers could be represented in the dipole

approximation. Secondly, we restrict the basis set to consider interaction only between two neighboring monomers at once, assuming that every other monomer is in its vibrational ground state. This approximation is exact for the case of dimer, and it makes treatment of the polymer possible.

The so-called excitonic basis set $\{|m\rangle\}$ is then formed from the products of three distinct terms taken for the same mode index ϕ: (1) excited state wavefunction $|e^A_{i\phi}\rangle$ on the monomer A having i vibrational quanta, (2) ground state wavefunction $|g^B_{j\phi}\rangle$ on the monomer B having j vibrational quanta, and (3) product of the ground state wavefunctions on the K-th monomer in the vibrational ground state:

$$|m\rangle = |e^A_{i\phi}\rangle\,|g^B_{j\phi}\rangle \prod_{K\neq A,B} |g^K_{0\phi}\rangle\,,$$

where A, B, K are monomer indices, i and j are number of vibrational quanta in the ground and excited states.

The global ground state is defined as:

$$|0\rangle = \prod_K |g^K_{0\phi}\rangle\,.$$

From these definitions it is possible to construct the desired basis set space. Then we define the Hamiltonian for the system of interacting monomers (for single-mode case for clarity):

$$\widehat{H} = \sum_A^N \widehat{H}_A + \sum_{A,B}^N \widehat{V}_{AB}, \quad A \neq B, A > B$$

where $\widehat{H}_A$ is the Hamiltonian acting on monomer A, $\widehat{V}_{AB}$ is the interaction operator between pair of monomers A and B. Diagonalization of this Hamiltonian in the excitonic basis give energies of the excitonic states and corresponding expansion coefficients. However, for N_g ground state vibrational levels, N_e excited state vibrational levels and N_m normal modes number of basis functions scales as $N_g^{N_m} N_e^{N_m}$, implying that memory demands for the diagonalization algorithm are huge for realistic systems. Computational efficiency of usual dense diagonalization routines drops heavily when number of elements is about 10000^2. In order to overcome this limitation, we have implemented sparse storage schemes and interfaced subspace iterative diagonalization methods from the PETSc and SLEPc packages [2] reducing total memory consumption by a factor of 4.

One limitation of the projection-based diagonalization schemes used for sparse matrices arises when we try to extract the lowest part of the spectrum. Methods like harmonic extraction can help a little, but generally fail to detect the lowest-lying eigenvalue, which is the most interesting one from physical point of view – it is the lowest excitonic state. To overcome this limitation we build initial guess iteratively making use of the fact that basis functions with small number of vibrational quanta will contribute most to the lowest excitonic state. After crude iterative refinement of the lowest state eigenvector, we add a few more eigenvectors to the subspace using the Gram-Schmidt procedure. Finally, we provide refined input guess space to the Krylov-Schur solver from SLEPc and obtain correct spectrum of eigenvalues and eigenvectors.

References

1. Cheng, Y.-C., & Fleming, G. R. (2009). Dynamics of light harvesting in photosynthesis. Annual Review of Physical Chemistry, 60, 241–62.

2. Balay, S. (1997). Efficient Management of Parallelism in Object Oriented Numerical Software Libraries. // Modern Software Tools in Scientific Computing (pp. 163–202). Birkhäuser Press.

УДК622.23.05

RATIONALITY OF USING MODULE FILTERS FOR OVERCOMING SOLID PARTICLES IN THE CONDITIONS OF OIL AND GAS WELLS WITH ESP

Kolmakov E.A.
Superviser: ZenkovI.V.,Dr. of Technical Sciences
Language adviser: Lobyneva E.I.
Siberian Federal University

Currently, one of the advanced ways of extracting formation fluid is to use ESP (electric submersible pump) in mechanized wells.Depending on the conditions the unit is equipped with various modules, such as the dispersant, various kinds of separators, the input module, downhole filters and module-filters to reduce the harmful effects of mechanical impurities located in the fluid at the pump.

According to the data of variousoil and gas companies, the statistics indicates that in complicated well stock the most common problem is the carryover of mechanical impurities.The mechanical impurities are often broken rock particles,fractions ofproppantafter hydraulic fracturing, sand, corrosionproducts ofthe underground equipment and various kinds of impurities which have fallen into the well from the surface.The hardness of these particles generally does not exceed 7 on a scale of Moss and their quantity is measured in the suspended state and denoted asQSM (quantity of suspended matter), and a unit of measurement is mg / l [1]. The amount of suspended solids in the formation fluid may vary depending on the given time interval.The main share of failures due to the carryover of mechanical impurities occurs with launching wells in operation after hydraulic fracturing,workover, drilling a second bore, or after stopping the pumping unit.

There are different methods dealing with mechanical impurities in ESP, which can be divided into two types: design of the pumping equipment and installation of additional equipment (see. Figure 1).

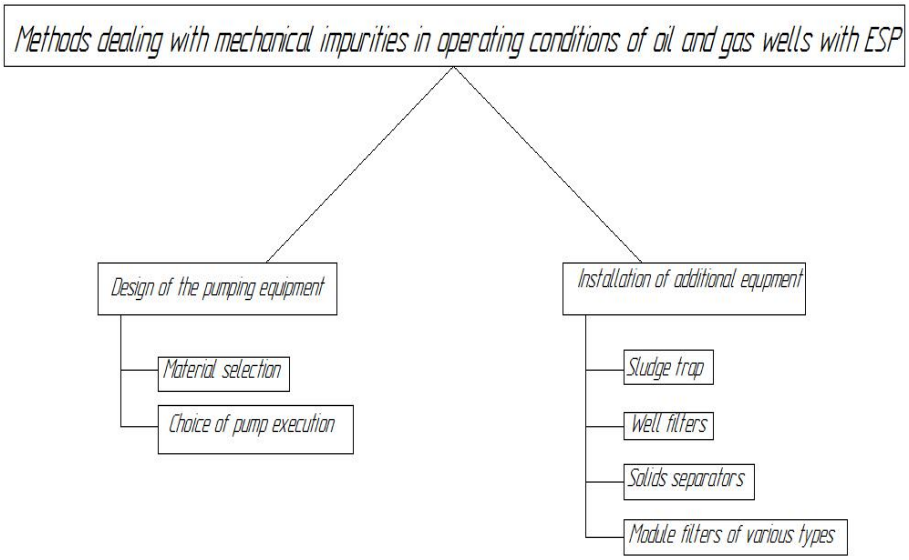

Figure 1. Classification of methods dealing with mechanical impurities in operating conditions of oil and gas wells with ESP

One of the most common and effective mechanical way to protect submersible centrifugal pumps for oil extracting from the effects of particulate matter are module-filters, which are installed between the seal section and the lower section of the pump.

The module filters must meet the following requirements:

• filtering surface area of the filter must provide the required amount of flow of the formation fluid;

• the amount of mechanical impurities flowing to the pump suction should be reduce;

• there is high mechanical strength for preventing collapse during transportation, round-trip, in conditions of high pressure and its fluctuations in the bottomhole formation zone and the emergence of hydrodynamic loads;

• there is high chemical and corrosion resistance.

The properly selected filter type provides:

• stability of the well production rate (injectivity);

• increase maintenance intervals of the unit.

There are four main, common types of filters (see. Figure 2):

• net-shaped filters;

• gravel filters;

• wire filters (frame-shaft);

• slottedfilters (tubular).

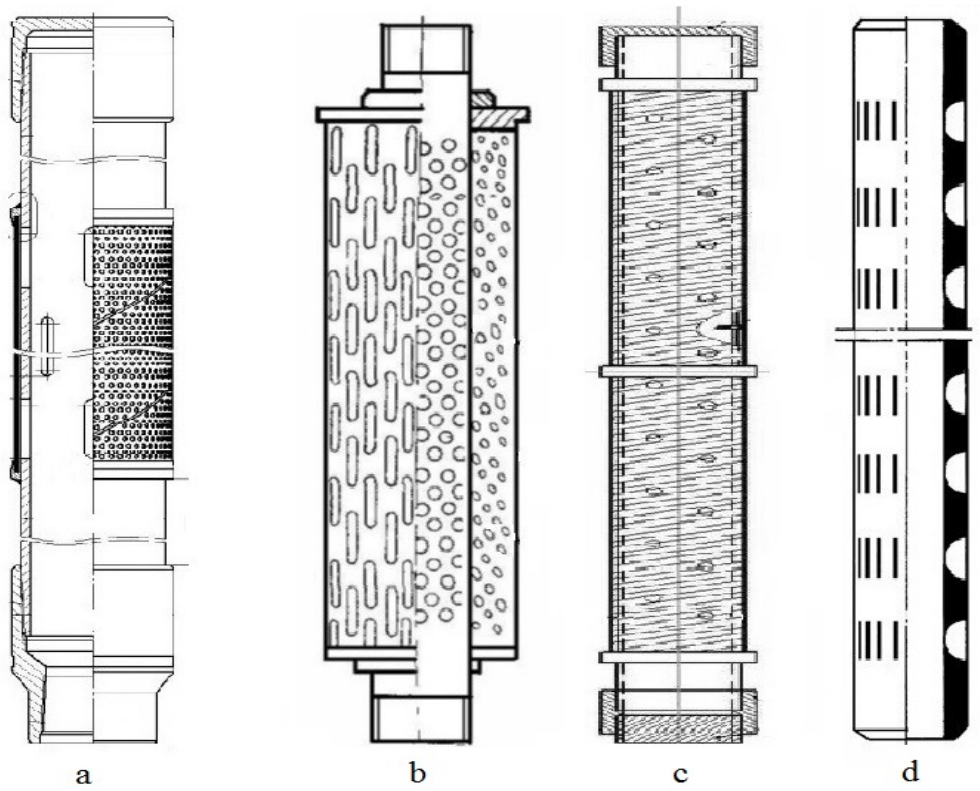

a -net-shaped filter; b-gravel filter; c-wire filter;d-tubular filter.

Figure 2 . Examples of module filters

At the momentthere is no uniform theoretical model for selecting filters for the well.The procedure of selecting filters for ESP depending on operating conditions and mining-mineral composition of the reservoir has an empirical character at most fields,that is, the selecting filters occurs based on the operating experience in this field or any other with the similar conditions. However, it is possible to rationalize the use of various filters designs in the certain operating conditions.

Due to its filtration propertiesnet-shaped filters are used most frequently at the fields of the Russian Federation, because size of removal solids often ranges from 0.1 to 0.3 mm [2]. The new models of this type can be configured to filter particles up to 0.05 mm [3]. The most efficient use of net-shaped filters is their application in rocks with the high content of sand, such as, medium-grained sand, with a particle size of 0.25-0.5 mm, as well as fine-grainedsand, with a particle size from 0.1 to 0.25mm. In such cases the grid of the filter element should be of braid configuration.

Gravel filters may be used with a medium-grained sand and fine-grained sand, in which this type of filter is the most effective. In the rocks with a predominance of medium sand such filters are appropriate, but they have some economical disadvantages.The cost of gravel filters is several times higher thanthat of the net-shaped filters, which callsinto question their application in this case from the technical and economical point of view.The use of gravel filters in fine sand is probably the best solution from a purely technical point of view,because they provide both good throughput of the formation fluid and filtration of fine particles. The main advantage of the gravel filters over other types of filters is an ability to use them in large heterogeneity of solid partials[3].

Wire type of module-filters is usedin the ESP for protecting from large size mechanical impurities and reducing the probability of gettingfiner particles to suctionof the pump.The use of wire filters in compliance with selection technique promotes effective fluid flow and helps to avoid clogging the filter element.This type of filters is applied in the half-rock unstable formations, crushed stone and pebble rocks with a predominant size of mechanical inclusions of crushed stones and pebbles from 20 to 100 mm, and in the rocks with the high content of gravel and gravelly sand with a particle size from 1 to 10 mm.Butthe most rational application of this type of filters is their use in the formations, whichcontaincoarse-grained sand with a predominant particle size of 1-2 mm (more than 50% by weight). In this casethe triangular profiles wire, when one vertex is directed into the filter, and the other two are located on its outer side is used[1]. It avoids carburization of cracks and compacting rock, vice versa, itstimulates the removal of particles smaller than a filter gap and purification of strained zone from sludge and fineparticles.

Tubular filters can be with round orslot perforation. This type of filters has many similarities with the design of the wire filters, since in both cases the formation fluid with suspended solids is filtering through the narrow slit.However, the use of classical slotted filtersis limited due to the difficulties of manufacturing the holes to match the dimensions of solids.But the tubular filters with round holes may still be used in wells containing large particles such as gravel and pebbles with size of 20 to 100 mm or in case of processing well with using of gravel dustingin the bottomhole of the formation zone.

Tubular filters with slotted perforations have much wider application. The location of these slots can be symmetrical, staggered or slot may be arranged horizontally.The module filters with slotted surface where the size of slitswould be 1 mm provide good filtering in rocks with gravel and gravelly sand with a particle size from 1 to 10 mm. Slotted filters are applied in cases above mentionedrelying oneconomical expediency, because there is no need for expensive filters

with the high degree of filtrating fine particles.Thedrawbackof this type is the lowest setting of porositycompared to other considered module filters design.

To sum up if there are mechanical impurities available in the extracting formation fluid use of module filters as a part of the ESP helps us to increase overhaul period of the unit, reduce the cost of round-trip operations and decrease the downtime. The correctly selected type and design of the filter will provide the best technical and technological parameters of wells without breakdownof inflow and the ESPoverhaul life. The type and design of the filter is selected depending on the operating conditions and the type of the rock.

References

1. Kamaletdinov R.S. Complicated operating conditions of oilfield equipment. Review of existing methods of controlling mechanical impurities. / R.S.Kamaletdinov, A.B.Lazarev. // Engineering Practice: oil and gas production and technical journal .- 2010. - №2. -p. 6-13

2. Shakirov E.I. Experience in the use of technology production and restrictions on the sand formations pack PC deposits of Barsukovskoyeoilfield. / E.I. Shakirov .// // Engineering Practice: oil and gas production and technical journal .- 2010. - №2. -p. 58-64

3. TatProm Holding / Analysis of the effectiveness of filters for the protection of the submersible equipment for oil extraction from mechanical impurities [electronic resource]. URL: http://www.tatpromfilter.ru/statii/Analiz-effektivnosti-filtrov.html (date accessed: 31/03/2015).

УДК624.011.1.001.63

WOODENNETVAULT USED INA BASKETBALL HALL

P. P.Melnikov, a post-graduate
Scientific Supervisor: I. S.Inzhutov, a doctor of Technical Science
Language Supervisor: V. V.Vonog, a Candidate of Cultural Science
Siberian Federal University

Introduction

The topicality of this research is explained by the following facts:

- A new roof structure, which could combine the architectural expression, reliability, meeting the requirements of industrialization and standardization applied in construction;
- A small number of technical solutions connected with wood design;
- Lack of sufficient experimental and theoretical studies connected with the wooden roof consisting of orthogonal units that are directed to use joints solutions;
- Lack of theoretical developments and regulations governing the design and manufacture of the above described construction;
- Winter University 29thUniversiade, which will be held in 2019 in Krasnoyarsk that did not use to be held in the USSR and the Russian Federation before.

The main aim of this research is development, design and study of wooden vault consisting of an orthogonal unit with new design solutions orthogonal units that are directed to the use of joints solutions.

This type of construction is used not only as a coating located above a basketball court, but it can also be used for another purpose.

Similar research has been conducted by the following Russian scientists as Ivan Inzhutov and Dmitry Loktevwho work for Siberian Federal University.

Erected buildings were selected on the existing sports field of Siberian Federal University, located above the existing underground parking near the hostel area. Before the beginning of the design measuring work of parking load-bearing structures and basketball and football fields, located at higher position were carried out. As a result the selected span structure corresponded to 19.5 m. The height and length of the construction corresponded to 9.15m and 43.5m respectively.

Developed constructive solution connected with net vault was found to be appropriate in terms of design of indoor basketball hall in the sports area of Siberian Federal University (Fig. 1). Additional loading affected underground parking was taken into account on the design stage. It was identified that constructions failed to take measures to strengthen floor slabs.

a)

b)

Figure. 1. 3D visualization of a vault unit consisting of an orthogonal grid of wooden double-slope members: Outside view; b) Inside view

Constructive solution of the sports facility is a wooden vault with a net carrying longitudinal and cross cut members. The cross cutmembers are arranged along an arc in a dome and staggered on its surface. The longitudinal members are arranged on straight lines along the arch. The length of the cross cut members is equal to two sides of the unit and the length of the longitudinal members of is equal to the section members (Fig. 3). The cross section of the longitudinal members are made by variable adjustment of an inverted double-slope beams. Longitudinal membersis constant section. In the vault there are 3 types of joints: 2 pair cross-cutto the longitudinal members in one level, floor connection with a longitudinal cross member and the connected with the length of the longitudinal elements.

Vault bearing the underground parking lot is done through a monolithic reinforced belt, the strength of which is designed for sufficient perception of vertical and horizontal loads without taking into consideration parking floor slabs. Thrust is supported by steel bars at a pitch of 3meters.

The stiffness in the longitudinal member of the vault is provided by erection joint connections which are mounted in the middle and the ends of coatings. Connections are made of metallic reinforcing bars 6 mm in diameter, the joints are attached due to the of bolted connections.

Compound longitudinal cross members and the support joints are made with the help of the 2T-shaped steel members consisted of plates of different thicknesses (Fig. 2), namely the plate adjacent to the cross cut member 9.5 mm thick, adjacent to the longitudinal - 5 mm. Compound steel members with wooden coaks were done due to connections of 14 and 16 mm diameter.

Floor-by-floor connection of cross-member (in the middle) with the longitudinal one was doneusing 4 space bars (cross dimension of which corresponded to 72x72 mm) (Fig. 3). Connection of wooden members of this joint is supported with the use of coak connections of12 mm diameter.

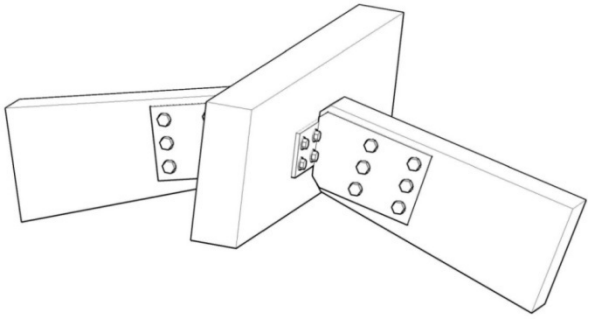

Figure 2. A joint of longitudinal and cross cut members

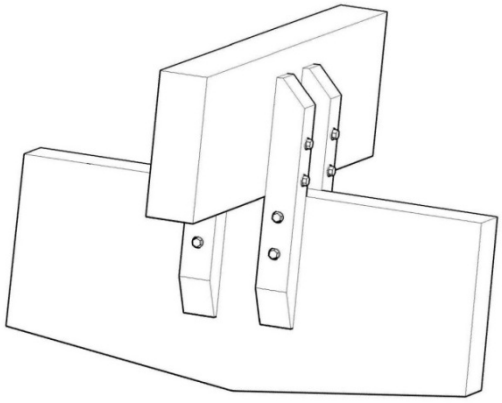

Figure 3. A floor cross cut member connection with the longitudinal

Panels with plywood sheathing on a wooden frame were proposed as fence. Plates made of rhomboid in a plan view and rest on the longitudinal members. Constructive solution of plates areshown in Figure 4. All mounting plates have been made by self-tapping screws.

In the coating two types of plates have been applied: with built-in three-compartment glazed and insulated with top and bottom plywood sheathing.

Opting for the diamond-shaped plates have been driven more by the desire to achieve a unique architectural expression of the coating and spectacular translucent coating.

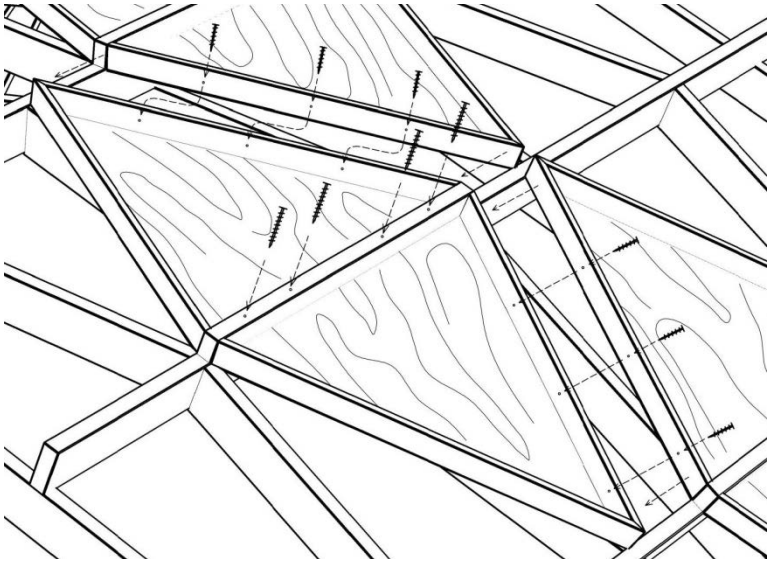

Figure.4. Node mounting plates through the self-tapping screws (upper shell and insulation are not shown)

Roof coating roof - ondulin. Total covered area was 1140 m2.

In conclusion it should be noted that the design solution combines a set of the following properties:

• commonalityof members supporting and enclosing structures;
• good transportability;
• installation without the use of heavy lifting equipment;
• optimization of the multilateral system of VAT at the design stage;
• variability of constructive solution grid used for specific tasks.

The application of mesh codes from orthogonal grid should be preferably used in cultural and mass construction. They can be easily used in a light coating of summer theaters, exhibition halls, covered markets, covering over sports facilities (summer skating rinks, tennis courts, children's playgrounds).

References

1. Inzhutov IS, Loktev DA, Endzhievsky LV, Sivchuk NA RF patent "Net wooden arch-shell» №2424403, date of issue 20.07.2011.

2. Loktev DA, Inzhutov IS, Deordiev SV, Sivchuk NA, Zhadanov VI, Ermolin VN RF patent "Net vault» №2484210, date of issue 10.06.2013.

3. Inzhutov IS, Deordiev SV, Loktev DA Search rational geometric parameters of a set of wooden net-based plate-rod design scheme in PC SCAD // Modern constructions of metal and wood: Sat. scientific.works. / Odessa State Academy of Construction and architecture. - Odessa. 2011. - Part 3. - S. 50-56.

УДК 004.415.22

IMPROVING ONBOARD SOFTWARE PORTABILITY

D.A. Panyushkin,
scientific supervisor doctor of techn. sciences Y.M. Knyazkin,
language supervisor V.G. Andyuseva
Siberian Federal University

Modern onboard satellite's computers have various architectures. For operating these satellite systems special software, named onboard software (OSW), is needed. However this software requires some source code fixes for different architectures. This source code editing makes development time consuming and error prone because of its traditional manual coding process. It was decided to improve OSW portability by the means of model-driven engineering (MDE) and make it possible to generate source code automatically.

Due to the fact that modern requirements to satellite production time are firmly fixed (approximately 2.5 years) company can't be competitive if it exceeds these time limits. Thus, the importance of automation in all development levels, including software development for onboard computer increases. Onboard computer is one of the satellite's main units because of its control role. High reliability requirements impose some restrictions; source code must be reused as much as possible for better testability on various architectures. This leads to model-based automatic SW generation.

JSC Academician M.F. Reshetnev «Information Satellite Systems» in collaboration with Ershov Institute of Informatics Systems and the Excelsior, Ltd developed approach based on architectural stratification and interface standardization both for the onboard software and the development environment [1]. This approach allows us to design OSW in platform-agnostic form by the means of cross-programming system (CPS). CPS is a mighty tool for developing software on instrumental PC for its successive execution on target embedded system. This approach implies adaptation for a new embedded computing system by creating new cross-compiler and instruction set simulator.

OSW has some standardized canonical structure. This structure is splitted into layers in the following way:

- Operating system layer (real-time kernel and a set of drivers);
- Abstraction layer (interfaces to the lower layer);
- Application layer (~80% OSW, platform-agnostic).

First layer is hardware-dependent software based on underlying architecture that we have to develop for all embedded systems' architectures. But it is creative process to design this layer and furthermore a lot of critical characteristics depend on OS core. For these reasons, OS layer software must be developed manually. Since third layer operates with interfaces provided by abstract layer, it allows us to develop SW in a platform-agnostic form. Therefore, we need to focus on abstraction layer.

Abstraction layer is a set of library files. There are a lot of procedures, constants, variables in these files' source code describing architecture's features, set of devices and giving interfaces from operating system to application layer [2]. Whereas some of them are tightly connected with underlying hardware, numerous source code fixes are required. One potential solution to overcome platform dependence is to raise the level of abstraction by distinguishing all hardware-dependent parts into one unit, such as model. Similar approach, named model-driven engineering,

allows developing hardware-dependent software by using model for automatic code generation. In a nutshell the term MDE is typically used to describe software development approaches in which abstract models of software systems are created and systematically transformed to specific implementations [3]. In our case we already have system's model – instruction set simulator that contains some required information, such as addresses, instructions etc. ISS must be developed in any case because it is essential for subsequent software development process and besides, it will assist to obtain a full model.

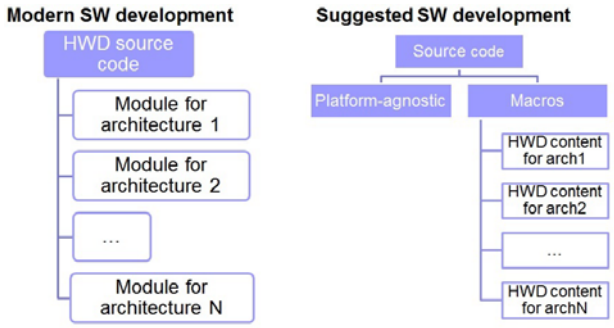

Fig. 1. Source file structure

To achieve portability file structure must be revised (fig. 1). Hardware-dependent code of source files must be distinguished and file's filling must be organized by the means of macro substitutions (fig. 2). Macro substitutions are performed in the preprocessing stage, so resulting code will same as developed for specific platform. Constants and procedures, depending on the underlying architecture are filled in the structured data language, such as XML, and subsequently are substituted into the source code. The entire set of template files arranged in the DLL for easy and optimal storage. Eventually after completing these steps, we develop a set of the source library files for specific target architecture with minimum need of manual operating. Such an approach allows to reduce OSW development time and reduce the possibility of errors.

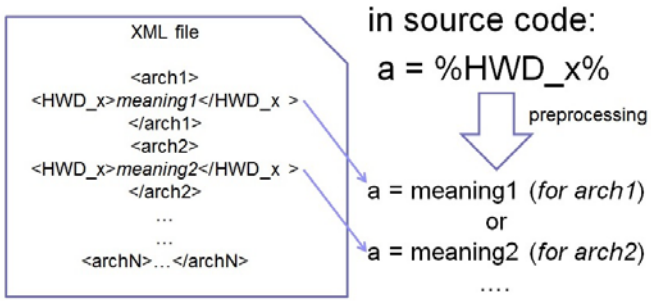

Fig. 2. Macro substitutions principle

In conclusion, it should be noted that described approach is useful for libraries' early prototyping for new target architecture. The resulting libraries will have functionality the same as written especially for a particular platform, but prototype's OSW development time will be significantly reduced. This will increase the level of abstraction and make it possible to achieve even better portability.

УДК 624.011.1.001.63

PECULIARITIES OF THE DESIGN BUILDING BASED ON RIBBED VAULT

A post-graduate: I. A. Polyakov;
Scientific supervisor: I. S. Inzhutov;
Language advisor: V. V. Vonog.
Siberian federal university

Nowadays much scientific attention is drawn to wooden constructions due to availability of timber resources in Krasnoyarsk Territory. According to statistics our Territory contributes to supply of building timber to a sufficient degree. The forest area is 20,3 % of the whole Russian forest fund (809,1 ml. ha). Timber fund of Krasnoyarsk Territory contains 11,5 bn. m^3. That is whythe use of forest resources of Krasnoyarsk Territory for construction for various purposes is advantageous and cost efficient. Erection of buildings and structures of expressive architectural forms with the use of timber and other timber materials is a promising trend particularly at the expense of increased use of glulam timber structures (Chaikin*et al*. [2]).

The authors have developed a complex of public buildings where the main structural elements used are two types of glulam timber semiarches with different radii of curvature. In order to reduce the basic structural elements manufacture costs, repeatability of some types of structural elements in all buildings is laid into the framework base. The decision adopted simplifies the process of erection and results in construction objects costs reduction.

The building of the pavilion type. This type of building is designed to accommodate objects of public catering, cafes, bars, etc. In the basis of the form-finding of the building the cross ribbed vault is put. Such vaults have a number of known advantages (Shuazi [5], Kidson [4], State standards [6]):

- Strict thrust localization;
- Vault flexibility due to independence of separate parts of the building;
- The possibility of window openings increasing;
- Low sensitivity to seismic effects.

The ribbed vault frame consists of two ogives with a 16m span, four 11m span spandrel arches placed around the perimeter of the square formed by the ogives and four inclined lancet three-hinged arches (further referred to as cantilever arches) with an 11m span (Figure 1).

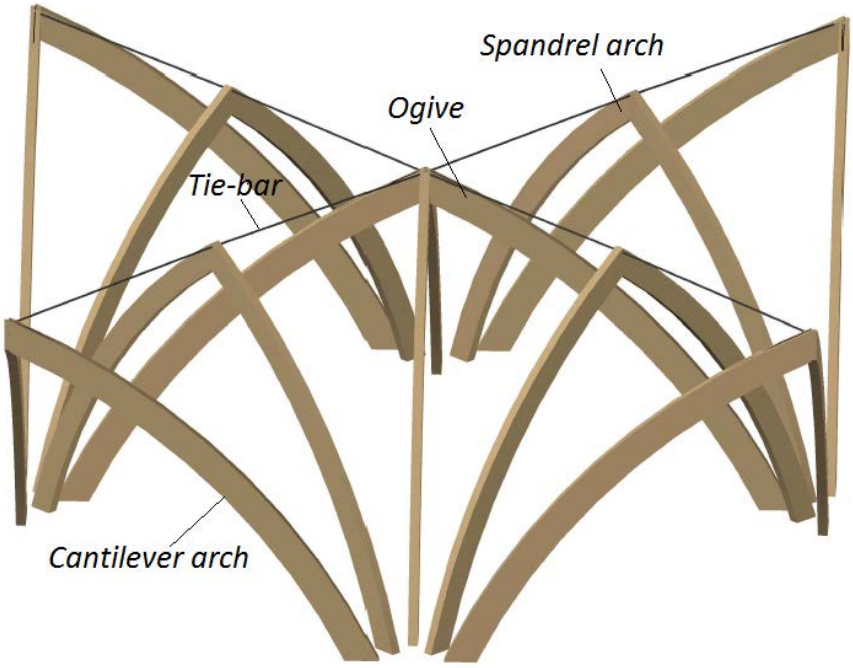

Figure 1. Scheme of cross ribbed vault

Dome-ribbed building. This type is designed for small sports gymnasiums (Figure2). A ribbed dome is a basis for its form-shaping. The dome consists of 12 separate, spaced radially plane bearing curvilinear elements. The frame elements are supported by lower and upper bearing rings, forming a 20m diameter ribbed dome. The dome rib step at the bottom is 3.9m.Cross ties are arranged between two adjacent ribs to ensure ribs stability and increase in the overall stiffness of the system.

To perceive the thrust efforts of the dome ribs acting on the columns and their transfer to foundations, meridionalsemiarches with a 5.5m span are arranged.

An increase in the useful area of the building and its architectural expressiveness is achieved at the expense of installing six spandrel arches with an 11m span, at a distance of 5.5 m from the lower bearing ring along the perimeter of the building. Spandrel arches are assembled from semiarches. For geometric invariability of the building they are connected with the lower dome bearing ring by means of ties performed from glulam beams of 110x210section and being 5.2 long.

Figure 2. An example of building use as a small wrestling hall

The building is characterized by the following indicators: useful area – 686.4m^2, timber consumption for frame construction – 16.3m^3, which is equal to 0.023m^3 for 1m^2; metal consumption – 214kg, which is 0.32kg per 1m^2 of the floor area.

The buildings described above are modular. It is possible to design and build various buildings by modules combination. Let us consider some examples.

Cafй of off-season purpose for 68 seats (Figure 3). The cross rib vault is at the basis of building form-shaping. Useful area of the building is 954.8m^2. The frame takes 23.7m^3 of timber and 352kg of steel. Timber consumption is 0.025m^3, steel – 0.37kg for 1m^2 of the floor area.

Figure 3. 3D image of the off-season cafe

The motel has 34 sleeping berths (Figure 4). A dome-ribbed vault is the basis of administrative part form-shaping. Useful area of the building is 846.2m^2. For frame building timber consumption is 14.5m^3, steel – 143kg. Timber consumption is 0.017m^3 and steel – 0.17kg for 1m^2 of floor space.

Figure 4. 3D image of the motel

The bus terminal (Figure 5). A dome-ribbed vault is at the basis of form-shaping. Useful area of the building is 536.3m^2. It is required 23.4m^3 of timber and 213kg of steel to build the frame. Timber consumption is 0.04m^3, steel – 0.39kg for 1m^2 of the floor space.

Figure 5. 3D image of the bus terminal

All the buildings are in the same style and have vivid architectural expressiveness combined with functionality [3].

In conclusion it should be noted that the main strategy in design is aimed to achieve maximum energy and resource effectiveness of the buildings considered above. The finishing materials meeting all modern requirements of energy effectiveness have been used. The most appropriate material that is considered to be value for money in construction industry is glulam timber.

References

[1] Building regulations 64.13330.2011 “Timber structures”. Institute “Stroitelstvo”, Moscow, 2011, 88.

[2] Chaikin E., Loktev D. and Inzhutov I., Timber structures for sport installations, in *Proceedings of the IASS-SLTE 2014 Symposium “Shells, Membranes and Spatial Structures: Footprints”*, R.Brasil and R.Pauletti (eds), 2014.

[3] Deordiev S., Abovskiy N., Endzhievskiy L., Inzhutov I. and Palagushkin V., Form-shaping of building structures. General and partial principles. *IzvestiyaVuzov. Stroitelstvo, Sibstrin*, 2013, # 11-12; 13-20.

[4] Kidson P., Murray P. and Thompson P., *History of English Architecture.* Moscow, 2003, 382.

[5] Shuazi A., Histoire de l’architecture. Volume 1, Moscow, 1937, 298.

УДК 624.014=111

THE WAY OF CREATING PRELIMINARY PRESSURE IN APPLIEDA STEEL CAGE OF COLUMNS STRENGTHENING

Y. S.Sergienko, a post-graduate
A. V.Zirka, a post-graduate
Scientific Supervisor: L. V. Endzhievsky
Language Supervisor: V. V. Vonog
Siberian Federal University

Recentlythe number ofvolumes of occupancy, civil and industrial buildingshas been increased significantly, hence there is a necessity for improving existing ways directed to strengthening of building designs.

One of the most expensive actions due toincreasing loads in frame buildings is strengthening existing columns. For these purposesmethods of the installation of column in holders from reinforced concrete or steelare applied. There are various ways of creating preliminary pressure thatare also successfully applied in work of steel cages for a long time in construction practice. However existing ways of design of preliminary pressure in the majority specific metal quantity are labour-consuming and contain high errors in measuring the valid size of longitudinal force thrust.

The purpose: Development of constructive decisions is directed to creating preliminary pressure in a steel holder, which would differ from existing methods simplicity, sufficient accuracy of control of preliminary pressure and low investment.

Problems: Development of optimum universal holding-down gear thatcorresponds to planned purposes and taking into account design features of this device. There is a necessity todesign the basic knots of a steel holder providing reliable transfer of vertical effort with holding-down gearaffected on a holder.

In terms of holding-down gear two hydraulic jacks weretaken as a basis. Besides, hydraulic jacks are reliable, have a manometre for controlling pressure force. They possess large load-carrying capacity,moreover small effort is required for their work.

This assembled traverse is placed at the support zone on a steel holder on a column. Preliminary pressure is carried out by two established with the different parties of a column the hydraulic jacks which bottom part goes through distributive elements against persistent corners, and the top part - the jack rod influences on the holding-down gear.

The holding-down gearis considered to be a traverse in this way of strengthening (fig. 1). It consists of two symmetrically located in channel bars connected among themselvesbolted by connections with possibility of antrust against in cross laths of a holder.

The advantages of the given way of strengthening is creation all-round crimping of steel corners of a holder, and reliable fixing of a moved rod of a jack in a traverse basic element. This variantcan be applied to strengthen any columns, but its greatest efficiency is reached at strengthening enough massive columns. However inthis way of strengthening there will be large expenses for secondary member designs of strengthening, and also for installation, dismantle and moving applied on building object of anassembled team traverse.

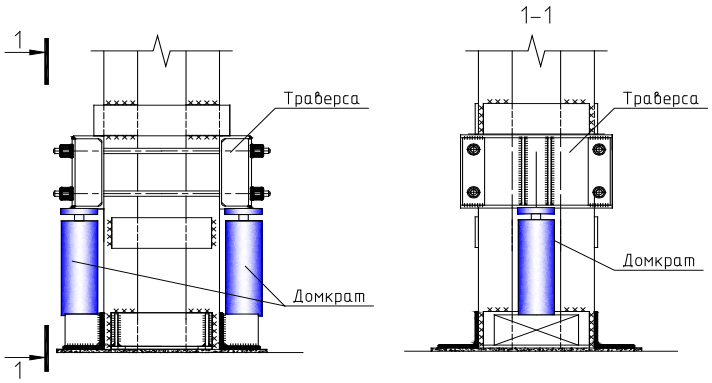

Fig. 1. The scheme of creation of preliminary pressure at column strengthening by means of jointed traverse (previous variant)

Improving the way (where massive traverse is replaced)is achieved by two small in the sizes steel elements, whichare fixed by means of the special device on cross-section laths of a holder.

Steel elementsof the facilitated design have been built in the form of a horizontal plate with a rigidity edge where influence of a moved jack rod and two vertical plates (fig. 2) will be carried out.

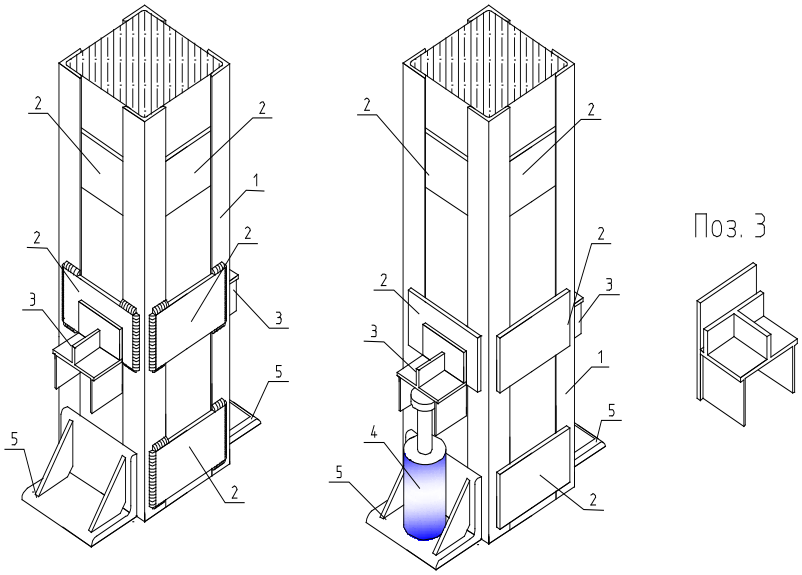

Fig. 2. The developed variant of the scheme of creation of preliminary pressure at strengthening of an average column by means of steel elements

It is supposed that strengthening will pass in this order. Vertical corners (1) are establishedin the corners of columns. They are fastened by three inventory clamps in regular intervals located on the height of the column.The top basic corners and cross-section laths (2) are

welded; a steel emphasis (3) is hung. Steel jacks (4) are established in an interval between steel elements and the bottom basic corners.

Then pressure in hydraulic system of jacks is applied, and preliminary pressure of a holder is reached to demanded value. After that, without removing pressure from jacks, the bottom basic corners are weldedto vertical corners.

The advantage of the above described way consists of reduction of materials consumption and decrease in labour input at the expense of more rational design of the device transferring effort of pressure from a jack on a column holder.

In reconstruction practice there can be a requirement for strengthening when the basic surface cannot apprehend vertical effort holding-down from influence on it of a jack. It can occur, for example, at strengthening of far columns (columns contacting with wall panels) AI-04frame. Here available console at the face part of a plate of overlapping concerning a crossbar is calculated on perception of rather small in regular intervals-distributed loading.

In such places wedesigned a way which the bottom basic surface is required on perception considerably smaller effort, than effort of preliminary pressure or it is not required in general (fig. 3).

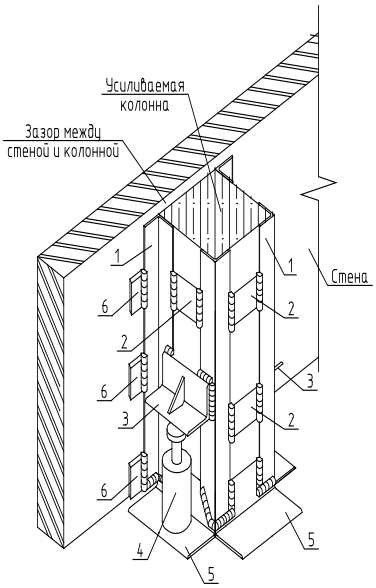

Fig. 3. The scheme of creation of preliminary pressure at strengthening of anfar column

The essence of this way consists of fastening using anchors of basic little tables (5) placed on the column near to overlapping. Influence of rods of jacks (4) in this case can be carried out on holders (1) strengthening'spreliminary welded to vertical corners cross-section corners (3). Already earlier described persistent elements, holding in basic cross-section laths from a strip steel. Taking into account that typical cross-section laths (2) holders of a column will densely adjoin to a column bodyin such method, with their help the presence of the constructive backlash. Will be put intopractice track curve at vertical corners will be provided. Vertical welded seams of fastening of vertical corners (1) to horizontal laths (2, 6), are imposed in places of contact of a feather of a vertical corner with laths. For increasing in length of a welded seam in the zone of

transfer of loading and for possibility of placing of anchors nuts and washers in the basic zone, the bottom part of vertical corners can be carried out with clamp.

This way is applicable as well for strengthening separate circles of columns and any compressed and beamcolumns made of reinforced concrete.

The numerical research has been conducted and optimum parameters of persistent devices under various loadings have been found. For the listed ways of design of preliminary pressure applications for a patenthave been submitted.

УДК 334.012

THE STRATEGIC VIEW OF A FINANCIAL APPROACH USED TO STIMULATE ORGANIZATION DEVELOPMENT

R. V. Trofimov, a postgraduate,
Scientific supervisor: I. S. Ferova, a Doctor of Economics
Language supervisor: V. V. Vonog, a Candidate of Cultural Science
Siberian Federal University

Nowadays the basis of the modern economy is considered to be the concept of the market. And the central part of market relations is devoted to a businessman. The key points of this politics are directed to organizations development corresponding to demands of the market where everyone performs the role of maintaining the system. This principle works, but does not lead to positive changes. Recently the market system has obtained a more optimistic future: creating the value of the product is reached by means of the following idea. The offer of supply happens due to using appropriate life values.

The financial approach, shown in Figure 1, is proposed to start from the point of view of understanding of the institutions, while conducting market and marketing analysis. We should realize the top growth for a specific period and extrapolate the current understanding of the market for future success. These factors cause necessity to construct a new form of existing relationships according to which the strategy and the system have different areas of their perception. The system isn’t an indicator of time. The system can be universal only out of time. Business appreciates the dynamics in time. Therefore, it is important to recognize the principles of the system development as something being at the cutting edge.

On the market the laws of "Demand and Supply" and "Rational Approach of the Consumption" exist in different ways. The only changes concerning the perspective of the Russian and the global market are referred to a new business. Creating an organization is a laborious process. Choosing the right viewpoint means taking much responsibility for the future success. There are many management approaches available: structural, functional, processional, projective, system, etc. We are certain to have a strategic approach that makes strategy be an integral part of any process. Any business is directed towards growth that is why understanding goals to be achieved becomes a primary task for any manager. Similar research has been conducted by the following scientists: C. K. Prahalad and M. S. Krishnan.

In the process of understanding the strategy the financial aspect should be taken into account as the key point. The finances are usually mentioned in the last turn in a business plan, but from the very beginning, finances seem to be very important when organizing any business.

The financial strategy is essentially the concept of management of financial and economic activity. Financial management is one of the important parts of overall management, which is directly related with various functional departments like personnel, marketing and production. It's management of all financial institutions of organizations and relations between them corresponds to the concept manipulated by this system. The financial system is formed after understanding the overall strategy. Also, overall strategy is required for development of the financial approach to planning of a business-organization. The ability of the process of management and the adequacy of finance in the long term should be defined.

The financial approach is not a revolutionary concept but an evolutionary. The definition and scope of financial management has been changed from one period to another period and applied various innovations. It requires a continuous reaction and actions. A strategy can be used as the long-term profits planning and the investments, but it is also used for realization of the innovations in a business management.

In conclusion it should be noted that understanding of the organization due to new perception of innovations has changed. Nowadays management combines a wide field of new ideas and reuse of management models that used to work before. The financial aspect will be reviewed in detail until the idea of the capitalist world appears, and we are unlikely to refuse this idea in terms of current understanding ourselves.

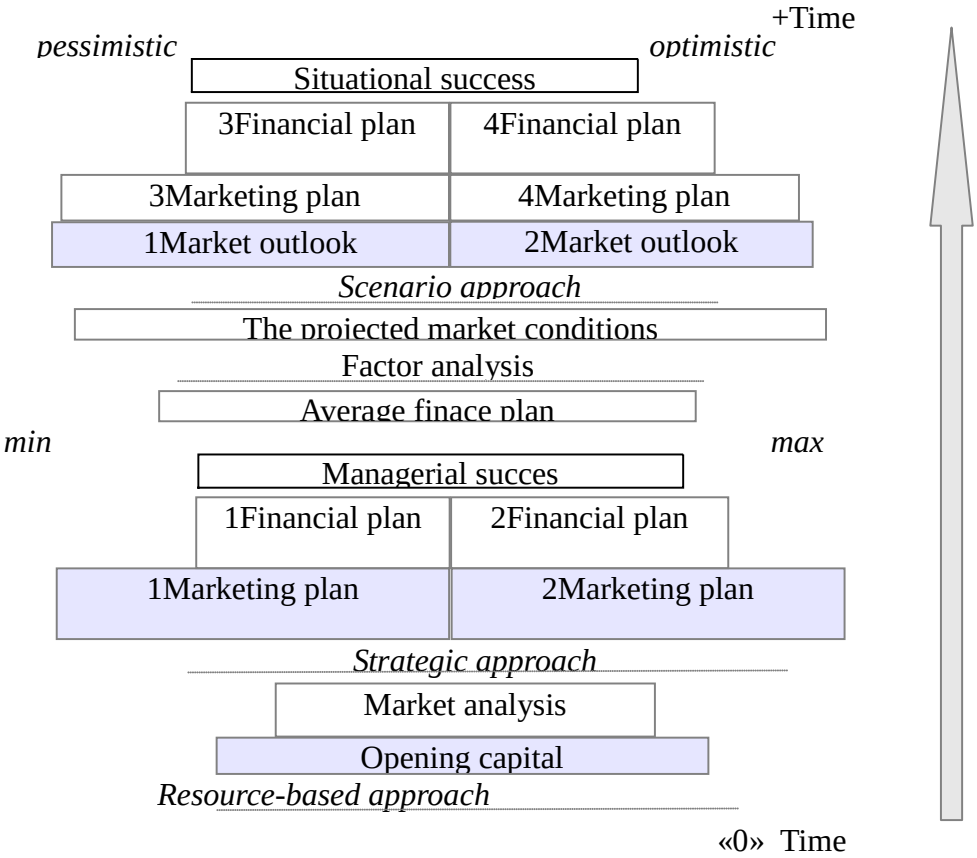

Figure 1. The diagram of the financial approach

Reference

1) Tim Mazzarol. Taking a Strategic Approach to Innovation in small firms – the application of a diagnostic assessment tool; presented to ANZAM Conference, 2005. 8-11 December, Canberra.

2) Beth A. Stroul, M.Ed., Sheila A. Pires, M.P.A., University of South Florida: Effective financing strategies for systems of care: examples from the Field, 2009.

3) Oxford economics electronic journal: Future trends and market opportunities in the world's largest 750 cities, 2012.

4) Dimitri Zengheli, The Grantham research institute in climate change and the Environment: A strategy for restoring confidence and economic growth through green investment and innovation, 2012.

5) An initiative of the global development incubator: InnovatIve FinancIng for development: scalable business models that produce economic: social, and environmental outcomes, 2014.